E&R GLASS CONTRACTORS, INC.
5369 Brooks Street • Montclair, CA 91763 • 909-624-6000 • FAX 909-624-6095 • License #831409-C17

LETTER OF TRANSMITTAL

COMPANY:	**R.C. Construction** **2223 N. Locust Ave.** **Rialto, CA 92377**	**TO:**	**Rich Negley**
PHONE:	**(909) 829-3688**	**DATE:**	**03/16/12**
FROM:	**Jennifer Bajenaru-Arnold**	**PROJECT:**	**James Madison E.S.**

Enclosed:

- ☐ Brochures
- ☐ Contracts
- ☐ Copy of Letter
- ☒ For Approval
- ☒ For Your Information
- ☒ For Your Use
- ☐ Guarantee
- ☐ Material List
- ☐ Per Your Request
- ☐ Plans
- ☐ Purchase Order
- ☐ Samples
- ☐ Shop Drawings
- ☒ Specifications
- ☒ Other

QTY	ITEM DESCRIPTION	SECTION
1	SUBSTITUTION REQUEST FOR ARCADIA	08410

Here is our substitution request to get Arcadia approved in place of US Aluminum CRL.

Please let us know if Arcadia is an acceptable substitution as soon as possible!

Thank you for your help!

March 16, 2012

Arcadia, Inc.
2301 E. Vernon Ave.
323-771-9819
323-771-9820 fax
323-908-5546 direct fax

E & R Glass Contractors, Inc.
5369 Brooks Street.
Montclair, Ca 91763
Attn: Jennifer Bajenaru-Arnold
Re: Partial Modernization for James Madison E.S.

Please find attached Arcadia's Substitution request form. Included are the proposed systems and their related systems specifications, test reports and comparison charts showing how Arcadia meets or exceeds the specified product. All competitor information is based on what is available on the internet and in the specifications. Arcadia is a local manufacture which means we have a better lead time as well as can provide extra LEED credits (MR5). Please feel free to contact me with any questions and I will promptly answer them

Thank you,

James Fitzsimmons
Arcadia Inc
323-908-5466 (direct)
714-244-9024 (cell)
323-908-5546 (fax)
jfitzsimmons@arcadiainc.com

Advancement of Construction Technology

SUBSTITUTION REQUEST
(During the Bidding Phase)

Project: Partial Modernization for James Madison E.S.

To: Adolph Ziemba AIA & Associates Inc. 111 North 1st Street Burbank, CA 91502

Re: 08410

Substitution Request Number:

From: James Fitzsimmons/ Arcadia Inc.

Date: 03-16-12

A/E Project Number:

Contract For: Glass & Glazing

Specification Title: Storefront Framing and Windows

Description: Alum Storefront & Windows

Section: 08410 Page: 1-6

Article/Paragraph: Part 2/ 2.01/ A

Proposed Substitution: Arcadia TC-670, TC-570 & T-200

Manufacturer: Arcadia Inc. Address: 3225 E Washington Blvd Phone: 323-908-5466

Trade Name: Alum. Curtain Wall/ Storefront/ Entrances / Windows Model No.: TC-670, TC-570 & T-200

Attached data includes product description, specifications, drawings, photographs, and performance and test data adequate for evaluation of the request; applicable portions of the data are clearly identified.

Attached data also includes a description of changes to the Contract Documents that the proposed substitution will require for its proper installation.

The Undersigned certifies:

- Proposed substitution has been fully investigated and determined to be equal or superior in all respects to specified product.
- Same warranty will be furnished for proposed substitution as for specified product.
- Same maintenance service and source of replacement parts, as applicable, is available.
- Proposed substitution will have no adverse effect on other trades and will not affect or delay progress schedule.
- Proposed substitution does not affect dimensions and functional clearances.
- Payment will be made for changes to building design, including A/E design, detailing, and construction costs caused by the substitution.

Submitted by: James Fitzsimmons

Signed by:

Firm: Arcadia Inc

Address: 3225 E Washington Blvd. Vernon CA 90058

Telephone: 323-908-5466

A/E's REVIEW AND ACTION

☐ Substitution approved - Make submittals in accordance with Specification Section 01330.
☐ Substitution approved as noted - Make submittals in accordance with Specification Section 01330.
☐ Substitution rejected - Use specified materials.
☐ Substitution Request received too late - Use specified materials.

Signed by: Date:

Supporting Data Attached: X ☐ Drawings X☐ Product Data ☐ Samples X☐ Tests ☐ Reports ☐ _____

© Copyright 1996, Construction Specifications Institute,
99 Canal Center Plaza, Suite 300 Alexandria, VA 22314

Product Comparison Thermal Window Wall
Arcadia TC-570 vs. CRL BG-525

	Line by line comparison	Arcadia TC-570	CRL BG-525
A.	Profile	2-1/4" x 5-1/4"	2-1/4" x 5-1/4""
B.	Material Domestic *	Aluminum 6063 T-6*	Aluminum 6063 T-6
C.	Glazing	1"	1"
D.	Gasket	EPDM	EPDM
E.	Air Infiltration	0.06 cfm/ft2	0.06 cfm/ft2
F.	Water Resistance	12 psf	12 psf
G.	Uniform load	ASTM E 330	ASTM E 330
H.	Seismic Testing	Yes	Yes
I.	Recycled Content	Yes	Yes $
J.	NFRC (Title 24)	Yes	?
K.	Regional Materials	Yes	NO
L.	LEED Credits MR4 (recycled content)	Yes	Yes
M.	LEED Credit MR5 (Locally extruded)	Yes	No
N.	Finish: Painted with 10 year warranty available	Yes	?
O.	Year Established	1930	1960

1995 CSI SECTION 08411 Aluminum-Framed Storefront
2004 CSI SECTION 08 41 13 Aluminum-Framed Entrance and Storefront
(Window Walls/Ribbon Walls)

Part 1 – General

1.01 Summary
- A. Section includes:
  - 1. Aluminum-Framed Storefront
    - a. Arcadia, Inc., TC570 Series, 2-1/4 x 5 1/4" Thermally broken; captured offset glazed, screw spline or punched opening fabrication for 1" glass.
- B. Related Sections:

1.02 References
- A. American Architectural Manufacturers Association (AAMA)
- B. American Society for Testing and Materials (ASTM)
- C. Aluminum Association (AA)

1.03 System Description
- A. General: In addition to requirements shown or specified, comply with:
  - 1. Applicable provisions of AAMA Aluminum Storefront and Entrance Manual for design, materials, fabrication and installation of component parts.
- B. Design Requirements: Arcadia TC570 Series is a framing system suitable for outside or inside glazing. Glass shall be forward of frame. Provides for two-color capability.
- C. Performance Requirements:
  - 1. Limit air leakage through assembly to 0.06 CFM/min/sq. ft. (.00003 m^3/sm^2) of wall area at 6.24 PSF (300 Pa) as measured in accordance with ASTM E283.
  - 2. Water Resistance: No water leakage when measured in accordance with ASTM E331 with a static test pressure of 12PSF.
  - 3. Dynamic Water Resistance: No water leakage, when measured in accordance with AAMA 501.1-94 with a dynamic test pressure of 12PSF.
  - 4. Limit mullion windload deflection of L/175 with full recovery of glazing materials, when measured in accordance with ASTM E 330.
  - 5. System shall not deflect more than 1/8" at the center point, or 1/16" at the center point of a horizontal member, once deadload points have been established.
  - 6. System shall accommodate expansion and contraction movement due to surface temperature differential of 180 degrees F.
  - 7. Seismic testing shall conform to AAMA recommended static test method for evaluating performance of curtain walls and storefront wall systems due to horizontal displacements associated with seismic movements and building sway.
  - 8. Thermal performance – When tested in accordance with AAMA 1503.1, and 1502.7, the following results should be attained: U. maximum .63/CRF – minimum of 59.
  - 9. National Fenestration Rating Council (NFRC) specific application evaluation.

1.04 Quality Assurance
- A. Single Source Responsibility:
  - 1. Obtain entrances, storefronts, ribbon walls, window walls, curtain walls, window systems, and finish through one source from a single manufacturer.
- B. Provide test reports from AAMA accredited laboratories certifying the performances as specified in 1.03.

1.05 Warranty
- A. System shall be warranted against failure and/or deterioration of metals due to manufacturing process for a period of two (2) years.

Part 2 – Products

2.01 Manufacturers
- A. Acceptable Manufacturers:
  - 1. Arcadia, Inc., 2301 E Vernon, Vernon, CA. Telephone 323/269-7300, Fax 323/269-7390.
- B. Acceptable Products:
  - 1. Arcadia, Inc., TC570 Series.

2.02 Framing Materials and Accessories
- A. Framing members, transition members, mullions, adaptors, and mounting: Extruded 6063-T6 aluminum alloy (ASTM B221 – Alloy G.S. 10a T6).
- B. Screws, fastening devices, and internal components: Aluminum, stainless steel, or zinc-plated steel in accordance with ASTM.A-164. Perimeter anchors shall be aluminum or steel, providing the steel is properly isolated from aluminum.
- C. Glazing Gasket
  - 1. Compression-type design, replaceable, molded or extruded santoprene, polyvinyl chloride (PVC), or ethylene propylene diene monomer (EPDM).
  - 2. Shall be of type that locks securely into the glazing reglet to prevent glazing gaskets from disengaging.

2.03 Finish
- A. Finish all exposed areas of aluminum and components as indicated.
  - 1. An Architectural Class II or I color anodic coating conforming with AA-M12C22A34/AA-M12C22A44.
    - a. Anodized finish color shall be Colornodic _____. (AB1 Light Champagne, AB2 Champagne, AB3 Light Bronze, AB4 Medium Bronze, AB5 Standard Medium Bronze, AB6 Dark Bronze, AB7 Standard Dark Bronze, AB8 Black, AG2 Gold.)
  - (or) 1. An Architectural Class II or I anodic coating conforming with AA-M12C22A31/AA-M12C22A41.
    - a. Anodize finish color shall be Colornodic _____ (#11 Clear)
  - (or) 1. Fluorocarbon Coating: AAMA 2605.2.
    - a. Resin: 70% PVDF Kynar 500/Hylar 5000.
    - b. Substrate: cleaned and pretreated with chromium phosphate.
    - c. Primer: Manufacturer's standard resin base compatible coating. Dry film thickness.
      - (a) Extrusion: Minimum 0.20 mil.
    - d. Color Coat: 70% PVDF, dry film thickness.
      - (a) Extrusion: 1.0 mil.
    - e. Color: As selected by Architect.
    - f. Acceptable Coatings Manufacturers:
      - (a) PPG Industries, Inc.
      - (b) Valspar Corporation
      - (c) BASF

2.04 System Fabrication
- A. Diverters shall be provided to collect water infiltration and divert from the interior of the system.
- B. Framing members shall be internally reinforced and secured at head and sill as necessary for structural performance requirements, for hardware attachment, and as indicated.
- C. Fasteners shall be so located as to ensure concealment from view in the final assembly.

Part 3 – Execution

3.01 Examinations
- A. Examine conditions and verify substrate conditions are acceptable for product installation.

3.02 Installation
- A. Install in accordance with approved shop drawings and manufacturers installation instructions.

3.03 Field Quality Control
- A. Test the storefront for water leaks in accordance with AAMA 501.2-94. Conduct test in the presence of the Architect. Correct deficiencies observed as a result of this test.

END OF SECTION

TC570 Series

Description:2 1/4" X 5 1/4" Captured Glazed For 1" Glass
Function:Window Wall
Detail:Horizontals, Verticals, Doors
Scale: 3" = 1'-0"

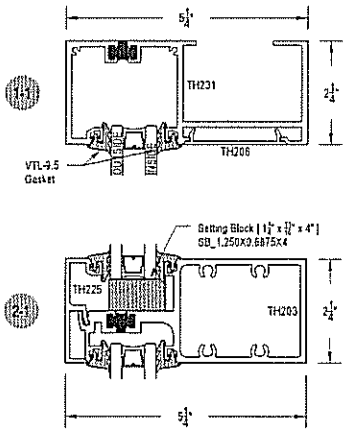

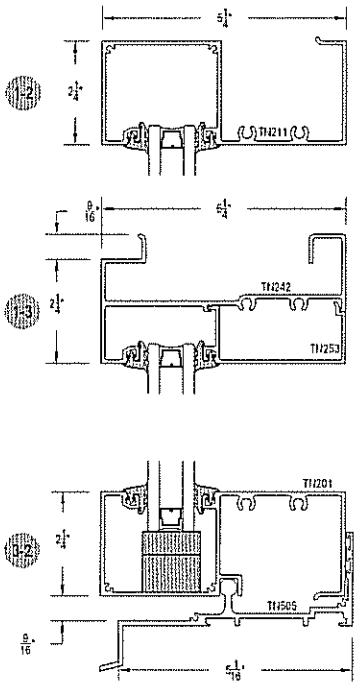

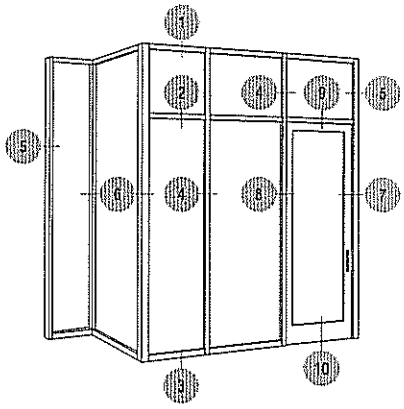

SCREW SPLINE
OUTSIDE SET

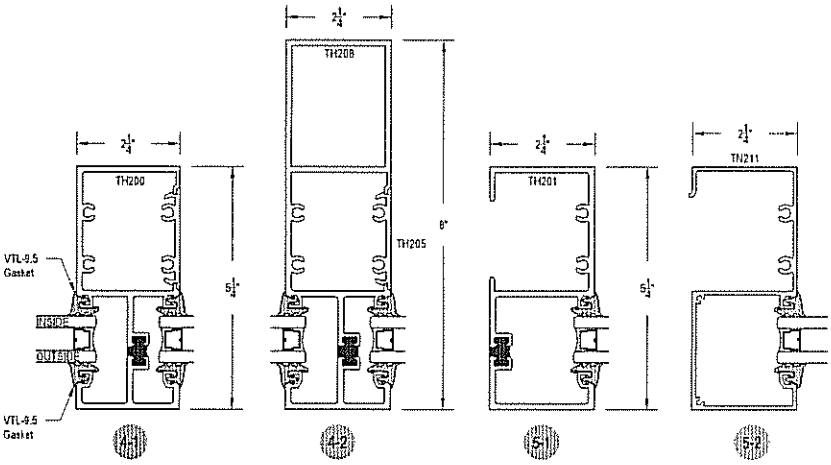

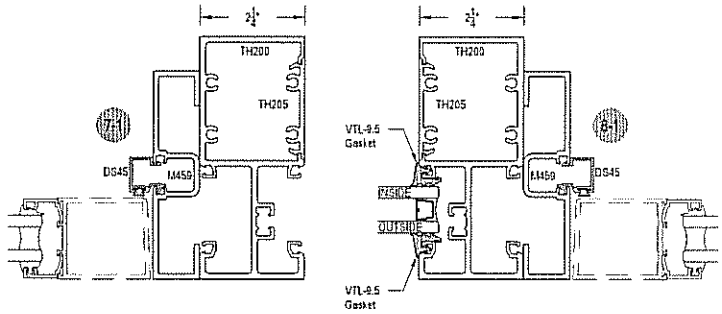

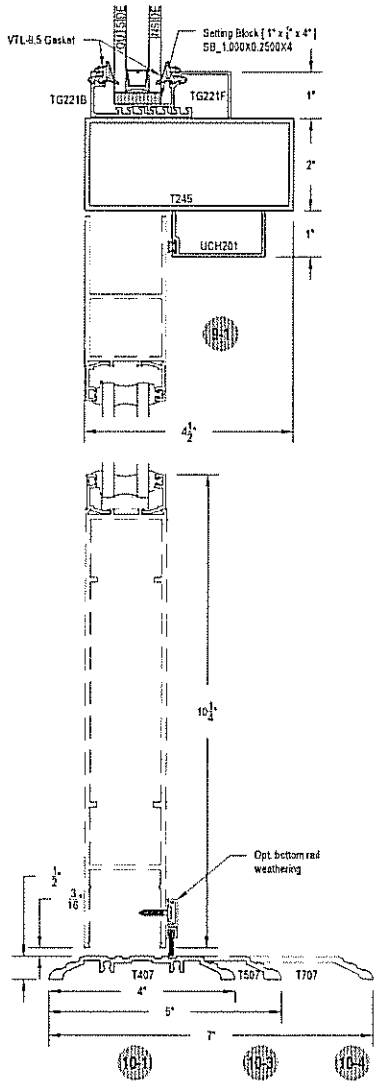

Product Comparison Thermal Window Wall
Arcadia TC-670 vs. CRL BG-600

	Line by line comparison	Arcadia TC-670	CRL BG-600
A.	Profile	2-1/4" x 6"	2-1/4" x 6"
B.	Material Domestic *	Aluminum 6063 T-6*	Aluminum 6063 T-6
C.	Glazing	1"	1"
D.	Gasket	EPDM	EPDM
E.	Air Infiltration	0.06 cfm/ft2	0.06 cfm/ft2
F.	Water Resistance	12 psf	12 psf
G.	Uniform load	ASTM E 330	ASTM E 330
H.	Seismic Testing	Yes	Yes
I.	Recycled Content	Yes	Yes $
J.	NFRC (Title 24)	Yes	?
K.	Regional Materials	Yes	NO
L.	LEED Credits MR4 (recycled content)	Yes	Yes
M.	LEED Credit MR5 (Locally extruded)	Yes	No
N.	Finish: Painted with 10 year warranty available	Yes	?
O.	Year Established	1930	1960

TC670 Series

Description: 2 1/4" X 6" Captured Glazed For 1" Glass
Function: Window Wall
Detail: Horizontals
Scale: 3" = 1'-0"

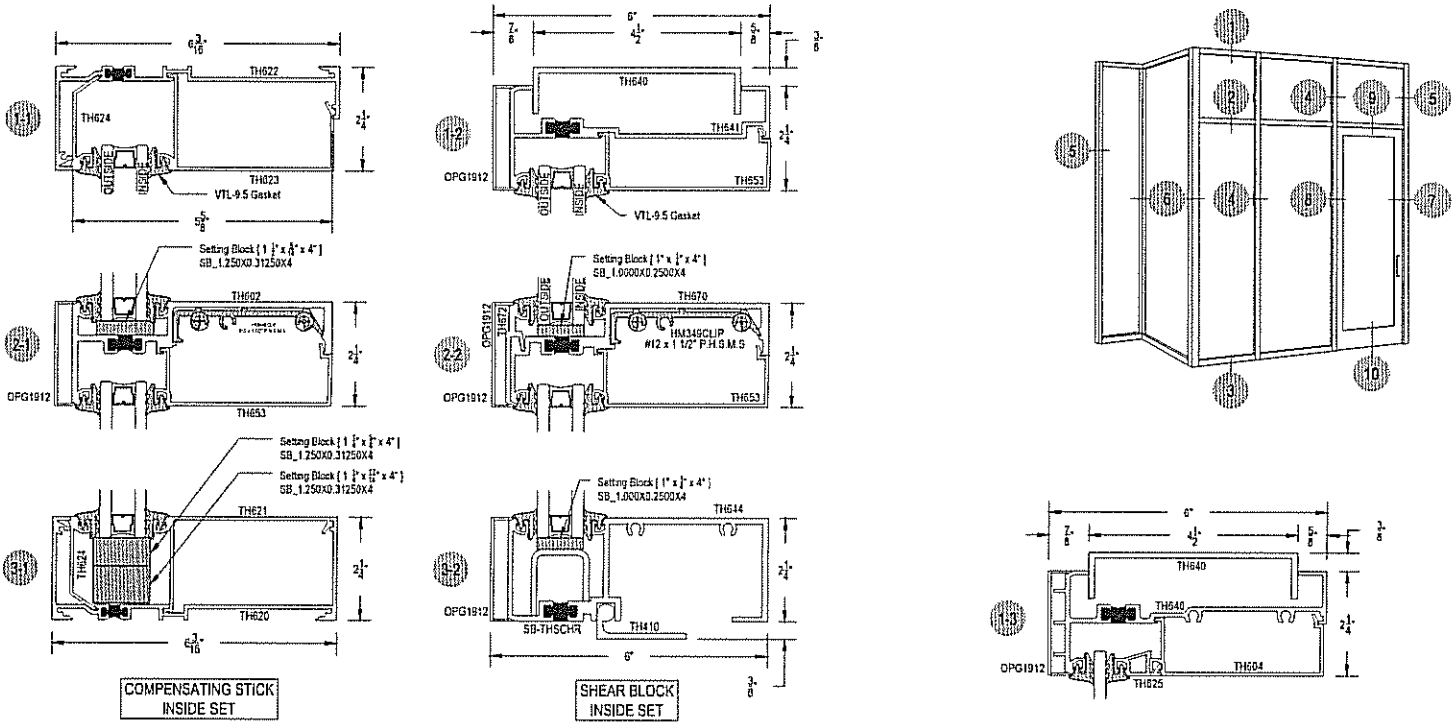

TC670 Series

Description: 2 1/4" X 6" Captured Glazed For 1" Glass
Function: Window Wall
Detail: Verticals
Scale: 3" = 1'-0"

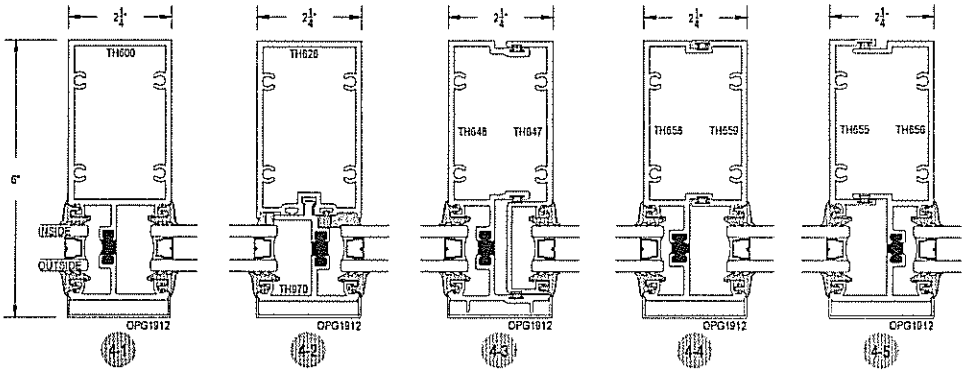

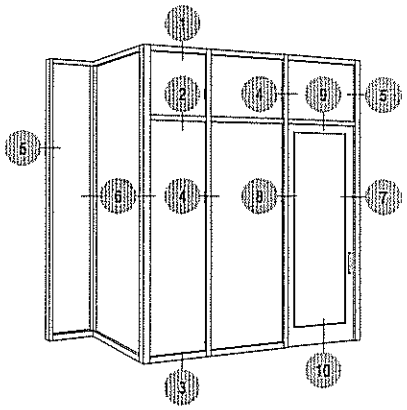

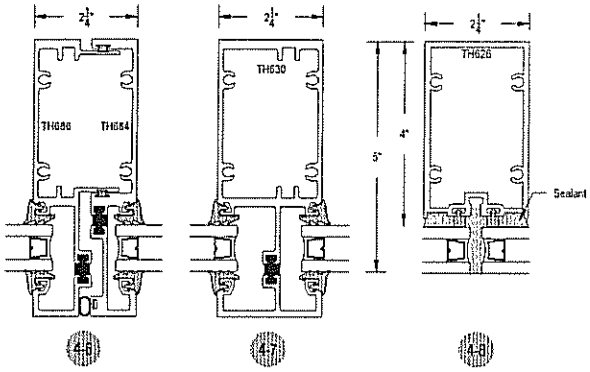

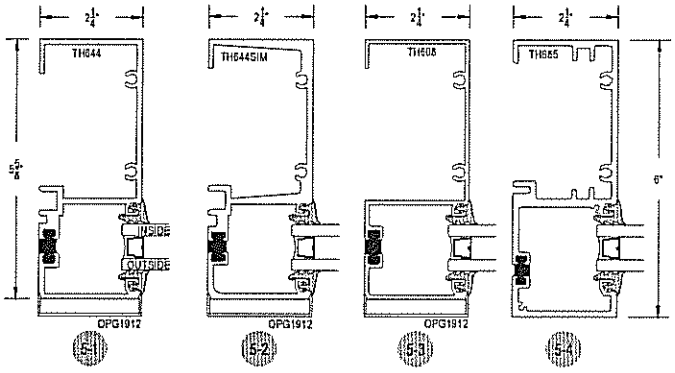

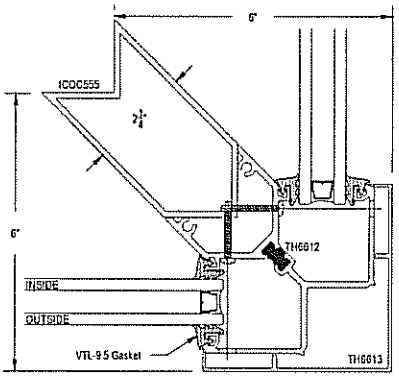

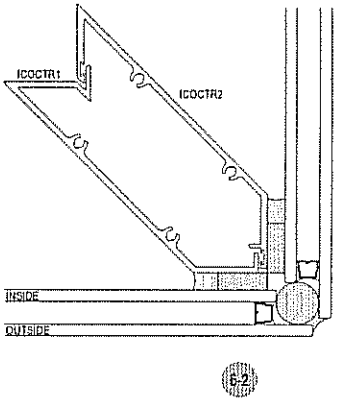

Minimum Order Requrement

TC670 Series

Description: 2 1/4" X 6" Captured Glazed For 1" Glass
Function: Window Wall
Detail: Doors
Scale: 3" = 1'-0"

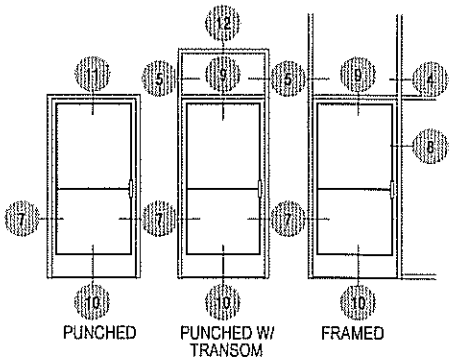

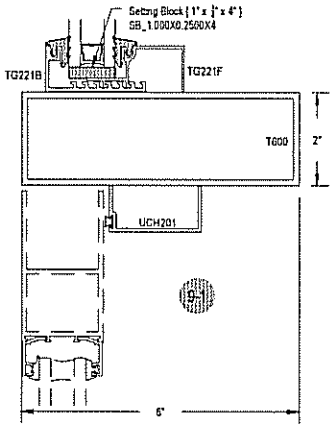

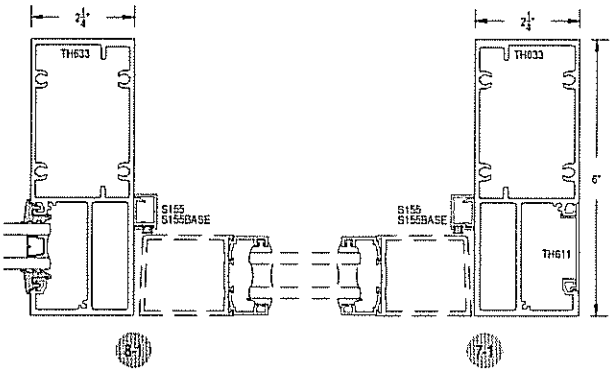

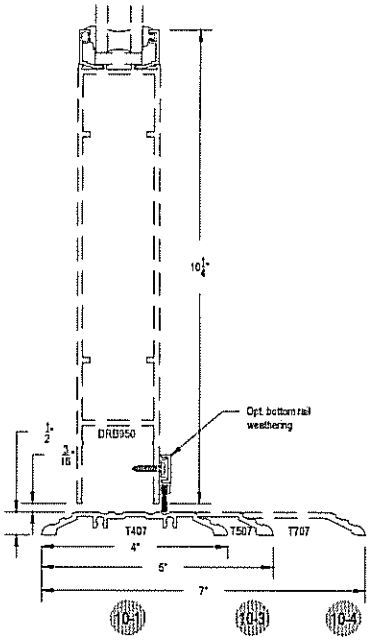

TC670 Series

Description: 2 1/4" X 6" Captured Glazed For 1" Glass
Function: Window Wall
Detail: Horizontals
Scale: 3" = 1'-0"

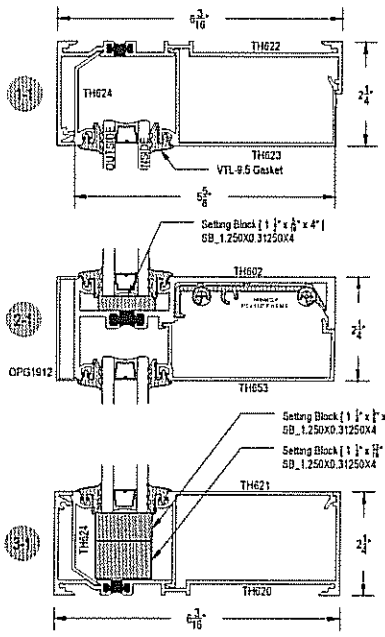

COMPENSATING STICK
INSIDE SET

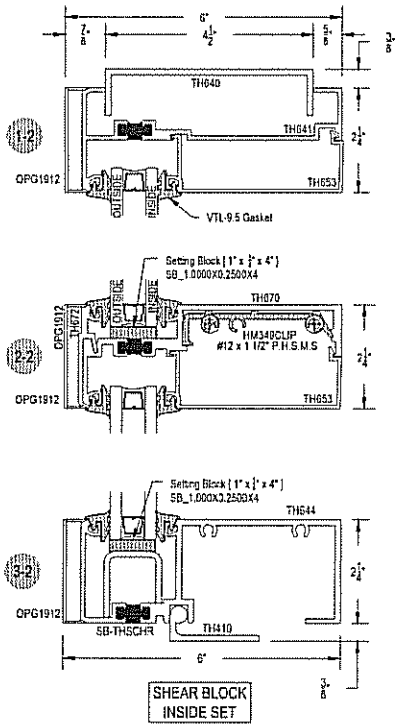

SHEAR BLOCK
INSIDE SET

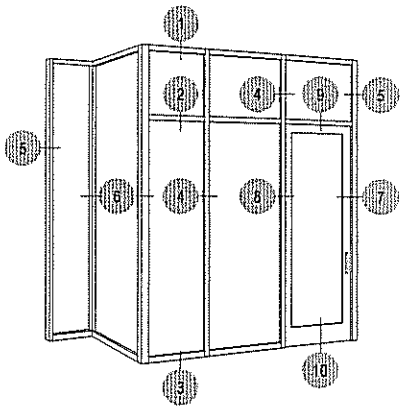

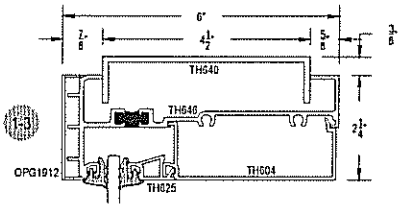

TC670 Series

Description: 2 1/4" X 6" Captured Glazed For 1" Glass
Function: Window Wall
Detail: Verticals
Scale: 3" = 1'-0"

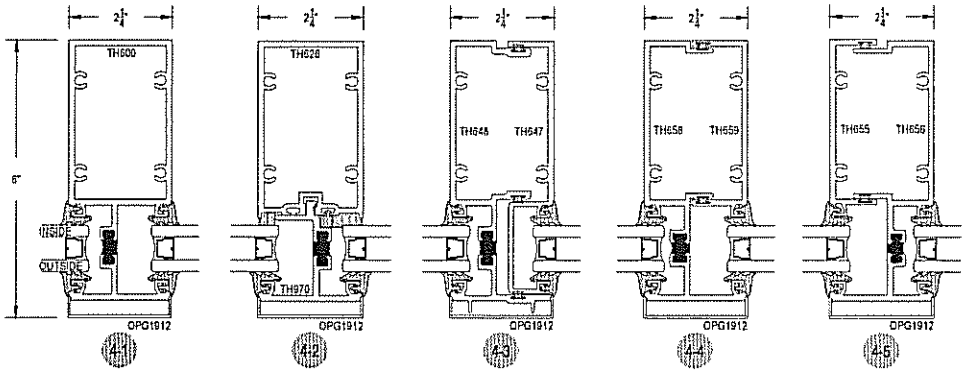

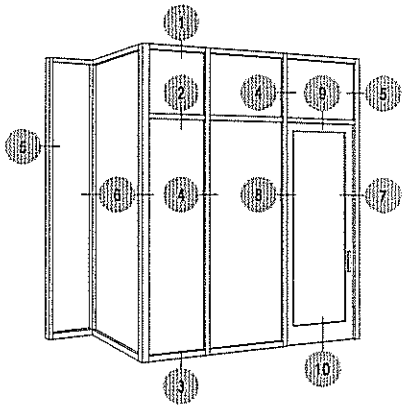

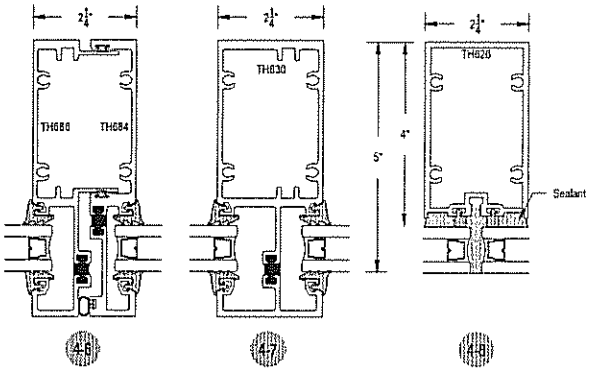

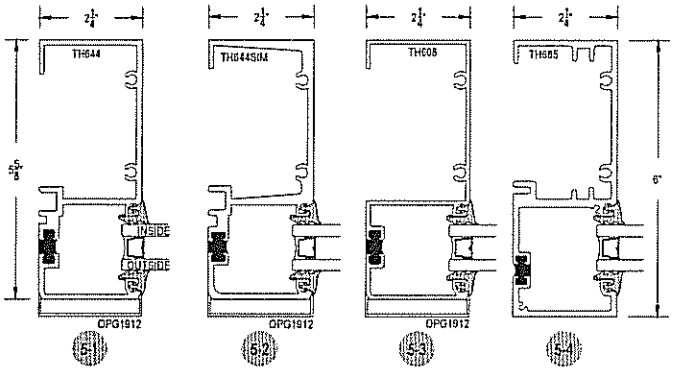

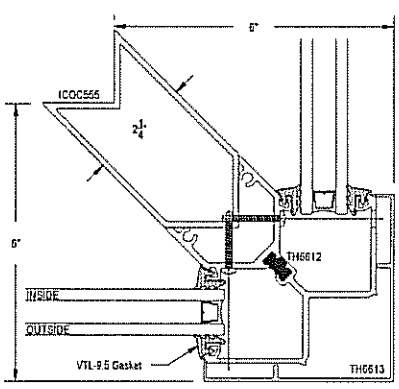

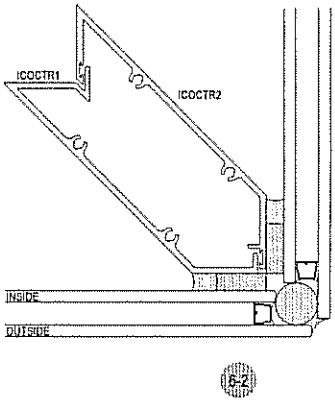

TC670 Series

Description: 2 1/4" X 6" Captured Glazed For 1" Glass
Function: Window Wall
Detail: Doors
Scale: 3" = 1'-0"

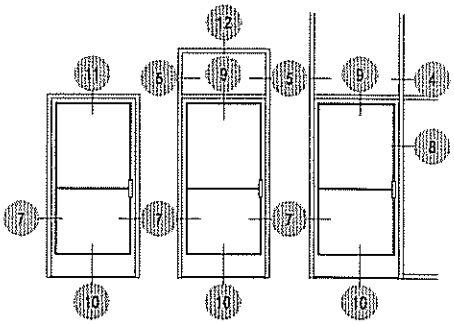

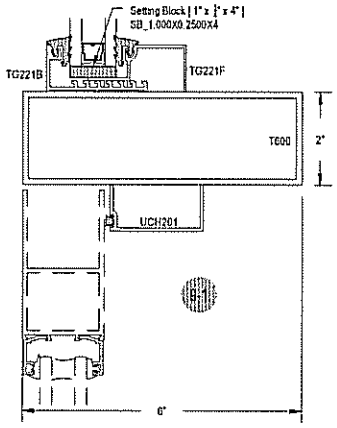

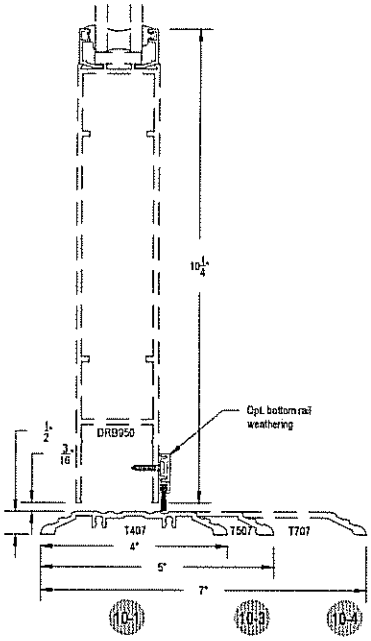

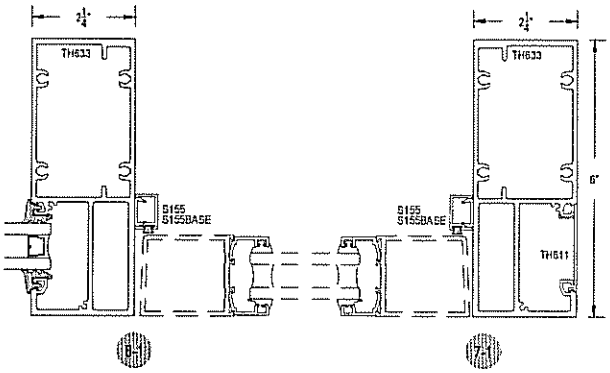

GENERAL NOTES:

THESE INSTALLATION INSTRUCTIONS ARE INTENDED TO BE USED AS A GUIDE FOR THE FABRICATION AND INSTALLATION OF THE SYSTEM DESCRIBED. USE THESE INSTRUCTIONS IN CONJUNCTION WITH THE CONTRACT DOCUMENTS, INCLUDING THE ARCHITECTURAL DRAWINGS, APPROVED SHOP DRAWINGS, AND STRUCTURAL CALCULATIONS.

IN THESE INSTRUCTIONS, EXPANSION JOINT AND PERIMETER SEAL DIMENSIONS ARE SHOWN AT A NOMINAL SIZE. REFER TO THE APPROVED SHOP DRAWINGS FOR JOINT CONFIGURATIONS AND DIMENSIONS SPECIFIC TO YOUR PROJECT.

1 – HANDLING, STORAGE, AND PROTECTION

A – HANDLE MATERIALS CAREFULLY AND STACK WITH ADEQUATE SEPARATION TO PROTECT FINISHED SURFACES.

B – STORE MATERIALS SO THAT THEY ARE PROTECTED FROM DAMAGE BY THE ELEMENTS AND OTHER CONSTRUCTION TRADES.

C – ESTABLISH RESPONSIBILITY FOR PROTECTION AFTER INSTALLATION. PROTECT MATERIALS FROM HARMFUL ELEMENTS. SHIELD MATERIALS WHEN FIELD WELDING. ADVISE THE GENERAL CONTRACTOR AND OTHER TRADES ACCORDINGLY. TOUCH UP WELDS AT STEEL ANCHORS WITH APPROPRIATE PAINT TO PREVENT RUST. CONCRETE, CEMENT PLASTER AND OTHER ALKALINE MATERIALS ARE VERY HARMFUL TO THE FINISH AND MUST BE REMOVED WITH WATER AND MILD SOAP BEFORE SETTING OCCURS.

2 – GENERAL PRACTICES

A – THOROUGHLY REVIEW THE ARCHITECTURAL DRAWINGS, SHOP DRAWINGS, CALCULATIONS, AND INSTALLATION INSTRUCTIONS PRIOR TO ORDERING GLASS OR FABRICATING MATERIAL.

B – BE AWARE OF APPLICABLE BUILDING CODES AND LOCAL CODE REQUIREMENTS. ARCADIA EXERCISES NO CONTROL OVER THE APPLICATION OR USE OF IT'S PRODUCTS, AND ASSUMES NO RESPONSIBILITY THEREOF.

C – REVIEW FIELD CONDITIONS. MAKE CERTAIN THAT CONSTRUCTION WHICH WILL RECEIVE YOUR MATERIALS IS IN ACCORDANCE WITH THE CONTRACT DOCUMENTS. IF IT IS NOT, NOTIFY THE GENERAL CONTRACTOR IN WRITING AND RESOLVE ANY DIFFERENCES PRIOR TO STARTING YOUR WORK.

D – COORDINATE THE SEQUENCE OF INSTALLATION WITH THE GENERAL CONTRACTOR. IF ANCHORAGE IS TO BE PRE SET, COORDINATE WITH THE GENERAL CONTRACTOR AND SUPERVISE INSTALLATION AND LOCATION.

E – CHECK ALL MATERIALS FOR CORRECT TYPES AND QUANTITIES UPON RECEIPT.

F – ALL WORK SHOULD START FROM BENCH MARKS AND COLUMN CENTER LINES ESTABLISHED BY THE ARCHITECTURAL DRAWINGS AND THE GENERAL CONTRACTOR.

G – INSTALL ALL MATERIALS PLUMB, LEVEL, AND TRUE.

H – FOLLOW THE SEALANT MANUFACTURER'S RECOMMENDATIONS FOR THE PROPER SEALANT AND APPLICATION FOR THE PROJECT. SEALANTS MUST BE COMPATIBLE WITH ALL SURFACES WITH WHICH THEY COME IN CONTACT. WHERE REQUIRED, SEALANTS MUST ADHERE TO ALL SURFACES, INCLUDING OTHER SEALANT SURFACES. IT IS THE RESPONSIBILITY OF THE GLAZING CONTRACTOR TO SUBMIT A STATEMENT FROM THE SEALANT MANUFACTURER INDICATING THAT THE GLAZING SEALANTS AND THE GLASS AND GLAZING MATERIALS HAVE BEEN TESTED FOR COMPATIBILITY AND ADHESION, AND FOR INTERPRETING TEST RESULTS RELATIVE TO PERFORMANCE, INCLUDING RECOMMENDATIONS FOR PRIMERS AND SUBSTRATE PREPARATION. THIS IS REQUIRED ON EVERY PROJECT.

J – ISOLATE ALUMINUM TO BE PLACED IN DIRECT CONTACT WITH MASONRY OR INCOMPATIBLE MATERIALS BY APPLYING A HEAVY COAT OF ZINC CHROMATE OR BITUMINOUS PAINT.

K – ONCE A REPRESENTATIVE PORTION OF THE SYSTEM HAS BEEN INSTALLED, GLAZED AND CAULKED, A WATER HOSE TEST SHOULD BE CONDUCTED IN ACCORDANCE WITH AAMA 501.2 SPECIFICATIONS. ON LARGER PROJECTS, PERIODIC WATER HOSE TESTS SHOULD BE PERFORMED TO ENSURE PROPER INSTALLATION.

L – THE INSTALLATION INSTRUCTIONS ARE OF A GENERAL NATURE AND COVER MOST COMMON CONDITIONS. THE SHOP DRAWINGS TAKE PRECEDENCE AS THEY INCLUDE CONDITIONS AND DETAILS SPECIFIC TO THE PROJECT.

TC–670 SYSTEM NOTES:

ARCADIA'S TC–670 SYSTEM IS A 2 1/4" X 6" PROFILE, OFFSET GLAZED SYSTEM DESIGNED TO PERMIT BOTH STICK AND SCREW RACE FABRICATION AND ERECTION.

THE TC–670 SYSTEM IS AVAILABLE IN THERMALLY BROKEN AND NON THERMALLY BROKEN CONFIGURATIONS.

THE SYSTEM ACCEPTS 1" GLAZING INFILLS AND CAN BE SHOP GLAZED, OR FIELD GLAZED FROM THE INTERIOR.

USE OF THE TC–670 SYSTEM FOR APPLICATIONS IN WHICH THE FRAME DIMENSION EXCEEDS TEN FEET IN HEIGHT CAN REDUCE SYSTEM PERFORMANCE AND IS NOT GENERALLY RECOMMENDED. CONTACT ARCADIA FOR INFORMATION AND ASSISTANCE.

THE ORDER IN WHICH CERTAIN FABRICATION AND ASSEMBLY OPERATIONS ARE PERFORMED IN THESE INSTRUCTIONS MAY BE ALTERED BY THE GLAZING CONTRACTOR TO SUIT JOB CONDITIONS OR PRE–ESTABLISHED PROCEDURES.
ANY DEVIATION WHICH EFFECTS THE INTEGRITY OR DIMINISHES THE PERFORMANCE OF THE SYSTEM HOWEVER, IS NOT ACCEPTABLE.

BASIC FRAMING – SCREW RACE SYSTEM

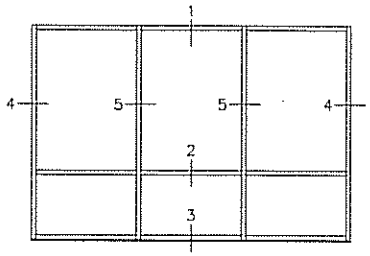

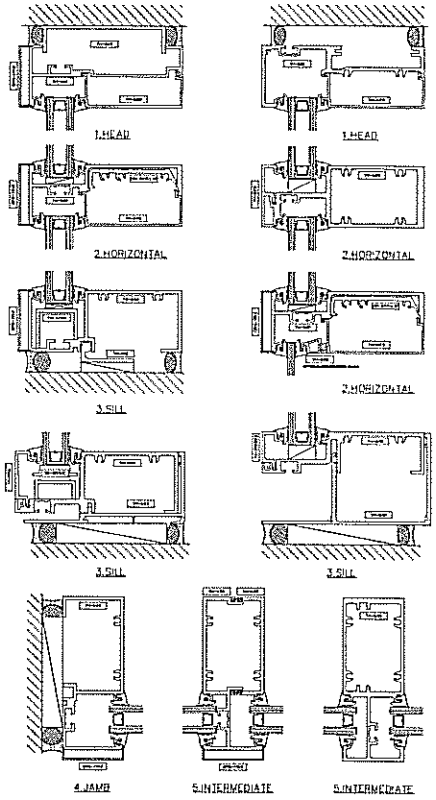

arcadia ARCADIA, INC.	TC–670 SYSTEM SCREW RACE FABRICATION AND INSTALLATION INSTR.	DATE: 08–19–08
		DRAWING:
		SHEET NO.: 1

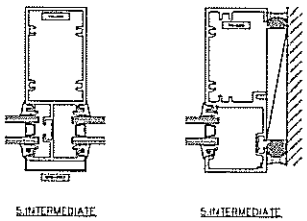

PRE INSTALLATION:

1 – CHECK OPENINGS

MAKE CERTAIN THAT ELEVATIONS AND SLABS ARE WITHIN THE ADJUSTMENT TOLERANCE OF THE ANCHORING SYSTEM. REFER TO THE APPROVED SHOP DRAWINGS FOR ALLOWABLE ADJUSTMENT.

ANCHORING SURFACES OF PERIMETER CONSTRUCTION MUST BE LEVEL AND PLUMB. REFER TO THE APPROVED SHOP DRAWINGS FOR ALLOWABLE ADJUSTMENT.

2 – MEASURE OPENINGS

MEASURE ROUGH OPENINGS TO DETERMINE FRAME DIMENSIONS. ALLOW FOR CLEARANCE BASED ON PERIMETER JOINT SPACING AS DETAILED IN THE SHOP DRAWINGS. MINIMUM CLEARANCE AT HEAD, SILL, AND JAMBS IS 1/4". EXTRA CLEARANCE MAY BE REQUIRED TO ACCOMMODATE CONSTRUCTION TOLERANCE.

FRAME FABRICATION AND ASSEMBLY:

1 – CUT VERTICAL AND HORIZONTAL MEMBERS TO LENGTH

AFTER CONFIRMING THAT OPENINGS ARE WITHIN SPECIFIED TOLERANCES, CUT MEMBERS TO LENGTH.

SUBSILL – CUT SUBSILL TO FRAME DIMENSION (F.D.) PLUS 1/8".*
VERTICAL MEMBERS – REFER TO THE SHOP DRAWINGS FOR PERIMETER JOINT SIZE AND DETERMINE DIMENSIONS "A" THROUGH "B" AS SHOWN.

A. STANDARD INSTALLATIONS: CUT VERTICAL MEMBERS TO DIMENSION "B" MINUS 1/32" FOR EASE OF INSTALLATION.

B. OPTIONAL STANDARD INSTALLATIONS: CUT VERTICAL MEMBERS TO DIMENSION "A" MINUS THE PERIMETER JOINT SIZE (1/4" MIN.). REFER TO THE SHOP DRAWINGS FOR THE PROPER PERIMETER JOINT SIZE.

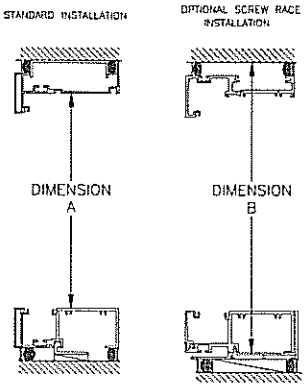

HEAD, HORIZONTAL, AND SILL MEMBERS – CUT HEAD, HORIZONTAL, AND SILL MEMBERS TO DAYLIGHT OPENING (D.L.O.). CUT GLASS STOPS TO D.L.O. MINUS 1/32" FOR EASE OF INSTALLATION.

* THE SUBSILL RUNS THROUGH. SUBSILL EXTENDS 1/8" PAST THE LAST WALL JAMB TO ALLOW FOR LAST PANEL INSTALLATION.

2 – PREP SUBSILLS.

LAY OUT AND DRILL HOLES FOR ANCHORS AT SUBSILLS AS REQUIRED. REFER TO THE SHOP DRAWINGS FOR TYPES AND LOCATIONS. DRILL A ROUND HOLE (FOR PINNED CONNECTION) NEAREST THE CENTER OF EACH SINGLE LENGTH OF SUBSILL. AT SUBSILLS, LOCATE HOLES AT GROVES AS SHOWN.

NOTE: CORNERS AND ENTRANCES REQUIRE A PINNED CONNECTION AT EITHER SIDE OF THE CORNER AND AT THE DOOR JAMBS. THE CONNECTION SHOULD NOT BE MORE THAN 6" FROM A CORNER POST OR DOOR JAMB.

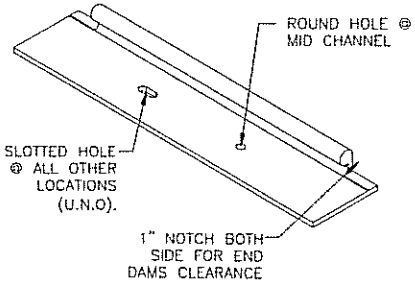

3 – PREP VERTICAL/HORIZONTAL MEMBERS

VERTICAL MULLIONS: AS REQUIRED, MARK THE LOCATIONS OF HEAD, HORIZONTAL, AND SILL MULLIONS PER THE SHOP DRAWINGS. DRILL HOLES FOR #14 P.H.S.M.S. ASSEMBLY SCREWS USING THE HOLE LOCATIONS IN THESE INSTRUCTIONS FOR THE HORIZONTALS REQUIRED FOR THE JOB.

ASSEMBLY SCREW HOLE LOCATIONS:

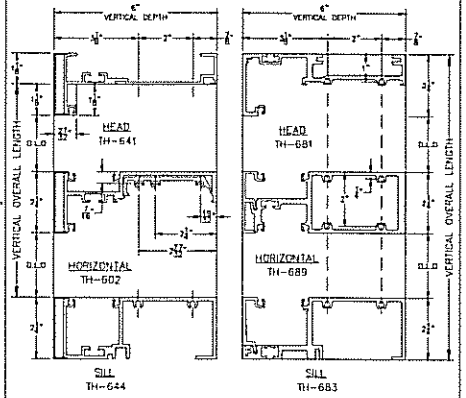

IMPORTANT NOTE: MAKE SURE WHEN LOCATING HOLES THAT THE THERMAL BREAK IN THE VERTICAL SNAP IN FILLER WILL NOT INTERFERE WITH THE THERMAL BREAK IN THE OPPOSING VERTICAL MULLION WHEN FRAMING UNITS ARE SNAPPED TOGETHER.

HEAD AND SILL HORIZONTAL MEMBER: AS REQUIRED, MARK THE LOCATION OF JAMB, AND INTERMEDIATE MULLIONS PER THE SHOP DRAWING. DRILL HOLES FOR #14 P.H.S.M.S. ASSEMBLY SCREW USING THE HOLE LOCATION.

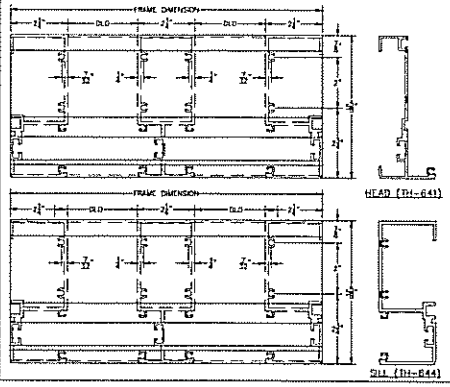

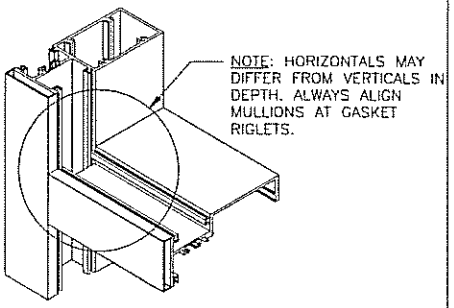

4 – INSTALL SUBSILL AS REQUIRED.

INSTALL SUBSILLS PLUMB LEVEL AND TRUE IN THE OPENING. REFER TO THE SHOP DRAWINGS FOR TYPE AND LOCATIONS OF PERIMETER ANCHORS. SHIM SUBSILLS, HEAD, AND WALL JAMB CHANNELS A MINIMUM OF 1/4" AT EACH FASTENER AND, AT THE SILL, UNDER THE LOCATION EACH VERTICAL MULLION. REFER TO THE SHOP DRAWINGS FOR PROPER PERIMETER JOINT SIZE.

HORIZONTAL EXPANSION JOINTS:

ELEVATIONS WHICH EXCEED 24' IN WIDTH REQUIRE EXPANSION JOINTS TO ACCOMMODATE THERMAL MOVEMENT. JOINTS SHOULD BE LOCATED AT THE CENTER OF A D.L.O. DO NOT LOCATE JOINTS AT VERTICAL MULLIONS.

IN ELEVATIONS WHICH CONTAIN CORNERS OR ENTRANCES, START INSTALLATION AT THE CORNER OR DOOR JAMB. A SPLICE JOINT SHOULD BE LOCATED AT A DISTANCE NO GREATER THAN 12' FROM A CORNER OR DOOR JAMB.

THE SIZE (WIDTH) OF THE JOINT SHOULD BE CALCULATED ACCORDING TO THE JOB REQUIREMENTS. THE FOLLOWING FORMULA MAY BE USED AS A GUIDE. SHOP DRAWINGS AND ENGINEERING CALCULATIONS TAKE PRECEDENCE.

LINEAR EXPANSION FOR ALUMINUM IN INCHES = LENGTH(") X DIFFERENCE IN TEMPERATURE (F°) X .0000128

arcadia ARCADIA, INC.	TC-670 SYSTEM SCREW RACE FABRICATION AND INSTALLATION INSTR.	DATE: 08-19-08
		DRAWING:
		SHEET NO.: 2

THE SUBSILL JOINT :

SURFACES OF SUBSILL JOINT SHOULD BE CLEANED AND PRIMED AS REQUIRED BEFORE INSTALLING SILICONE SHEET.

APPLY SILICONE SEALANT TO EACH SIDE OF THE SUBSILL JOINT AS SHOWN.

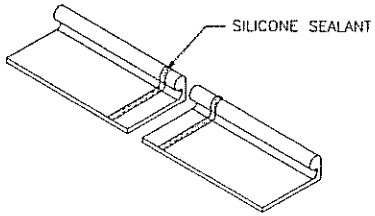

INSTALL SILICONE SHEET OVER SILICONE SEALANT AS SHOWN. REMOVE EXCESS SEALANT WITH TOOL.

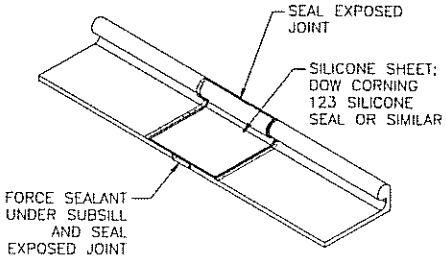

NOTE: MAKE SURE THAT SILICONE SEALANT IS COMPATIBLE WITH SILICONE SHEET.

5 – ASSEMBLE FRAMING UNITS

A. FOR STANDARD INSTALLATIONS, PREP HEAD HORIZONTALS FOR PERIMETER ANCHORS – REFER TO THE SHOP DRAWINGS FOR TYPES AND LOCATIONS.

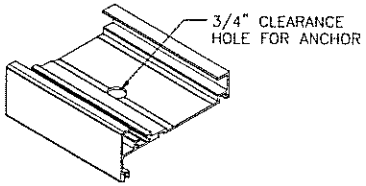

B. APPLY SEALANT TO SILL AND ATTACH END DAMS WITH SCREWS AS SHOWN.

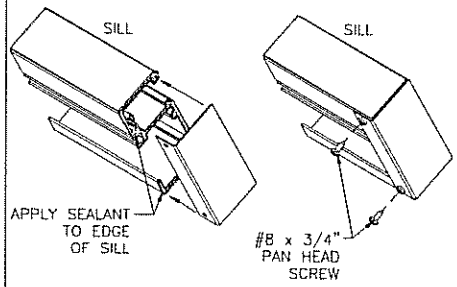

NOTE: INSTALL END DAMS AT HEAD. APPLY SEALANT AND SCREWS WITH SAME CONDITION AT SILL

C. JUST PRIOR TO ASSEMBLY, APPLY A BEAD OF SEALANT TO THE ENDS OF EACH VERTICAL MEMBER. ASSEMBLE THE UNITS USING #14 X 1" P.H. SCREWS AT EACH JOINT.

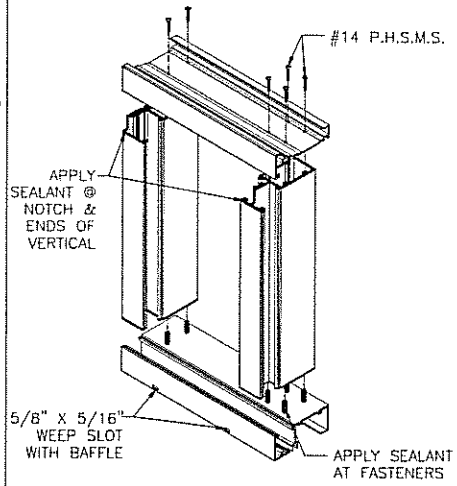

OPTIONAL SCREW RACE INSTALLATION

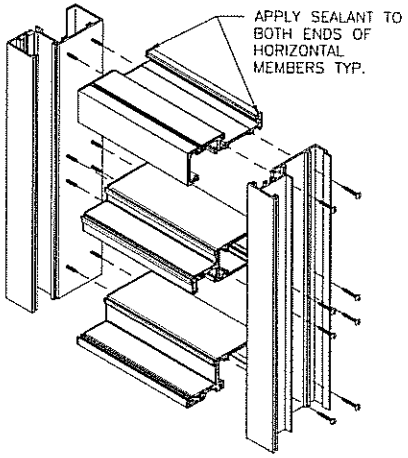

NOTE: AN OPTIONAL SCREW RACE CAN MAKE THE UNIT AS MANY AS NEEDED.

ELEVATIONS WITH HORIZONTALS USING CLIP

D. APPLY SEALANT TO HORIZONTAL ANCHORS AT VERTICAL MULLION CONTACT AREAS. INSTALL HORIZONTAL ANCHORS AT VERTICALS AS SHOWN, (DETAIL IS SIMILAR FOR JAMB AND CORNER MULLIONS).

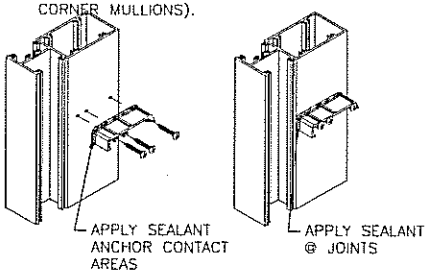

E. JUST PRIOR TO INSTALLING HORIZONTALS, APPLY SEALANT TO THE JOINTS @ HORIZONTAL ANCHORS AND VERTICALS.

F. PLACE THE HORIZONTALS OVER THE HORIZONTAL ANCHORS AND ATTACH WITH SCREWS AS SHOWN.

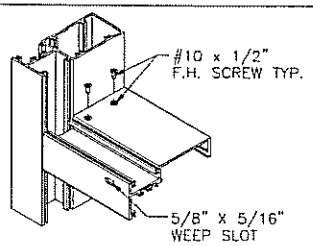

G. LOCATE PERIMETER ANCHOR LOCATIONS AND DRILL ACCESS HOLES IN HEADERS. PLACE U-CHANNEL ANCHOR INTO HEADERS AND ALIGN ANCHOR HOLES WITH ACCESS HOLES. USE TAPE TO TEMPORARILY HOLD U-CHANNEL ANCHOR IN PLACE.

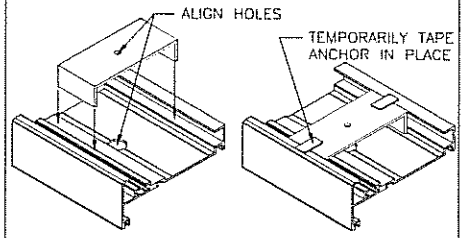

6 – STANDART FRAMING INSTALLATION

A. APPLY A BEAD OF SEALANT TO THE INSIDE SNAP OF ANCHOR BALL AT SILL. PLACE A UNIT INTO POSITION AND MOVE IT DOWN AS SHOWN.

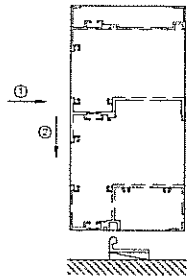

arcadia ARCADIA, INC.	TC-670 SYSTEM SCREW RACE FABRICATION AND INSTALLATION INSTR.	DATE: 08-19-08
		DRAWING:
		SHEET NO.: 3

ALTERNATE METHOD :

SWING A UNIT INTO POSITION SO THE SNAP ANCHOR BALL MAY REACH ANCHOR BALL AND REST THE UNIT ON THE ANCHOR BALL.

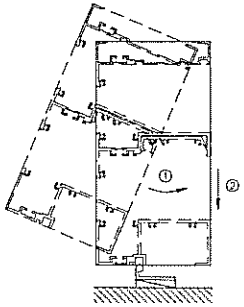

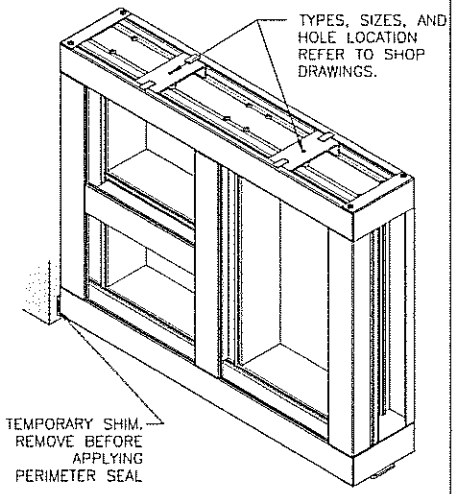

B. PLUMB THE FRAMING UNIT AND ANCHOR TO STRUCTURE. REFER TO THE SHOP DRAWINGS FOR TYPES AND LOCATIONS OF HEAD, AND IF REQUIRED, JAMB PERIMETER ANCHORS.

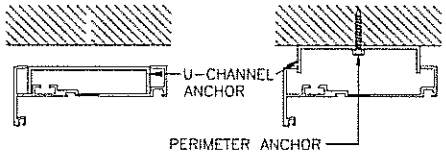

7 – INSTALL PERIMETER SEALS

INSTALL THE PERIMETER SEALS PER THE APPROVED SHOP DRAWINGS AND THE SEALANT MANUFACTURER'S RECOMMENDATIONS.

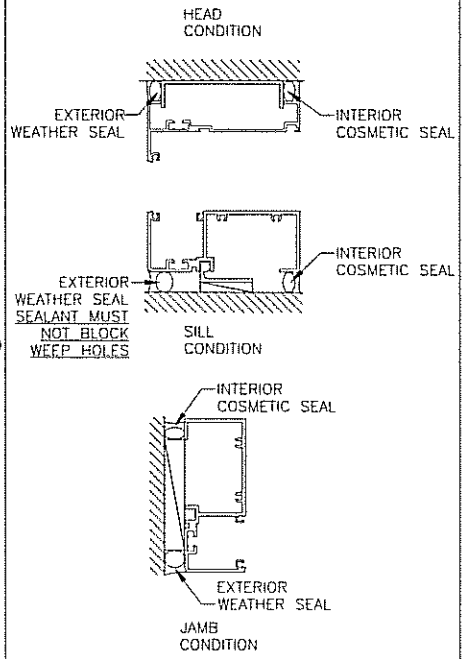

8 – INSTALL WATER DIVERTERS

SET THE WATER DIVERTER IN A BED OF SEALANT. SEAL AND TOOL ALL SIDES OF THE WATER DIVERTER AS SHOWN.

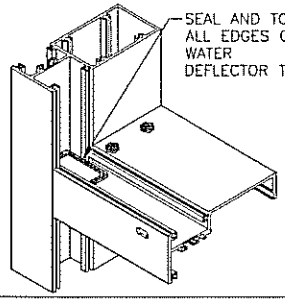

NOTE:
COMPLETELY SEAL OFF THE VERTICAL MULLION GLAZING POCKET AT EACH END OF THE HORIZONTAL MULLION.

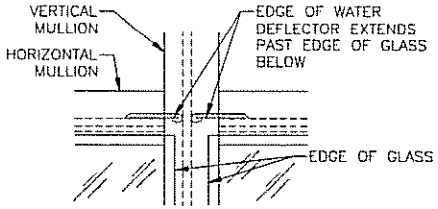

9 – INSTALL SETTING CHAIR

INSTALL SETTING CHAIRS. LOCATE SETTING CHAIRS PER THE SHOP DRAWINGS OR DEAD LOAD CHARTS.

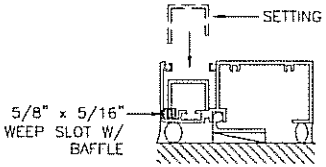

10 – INSTALL EXTERIOR GLAZING GASKETS

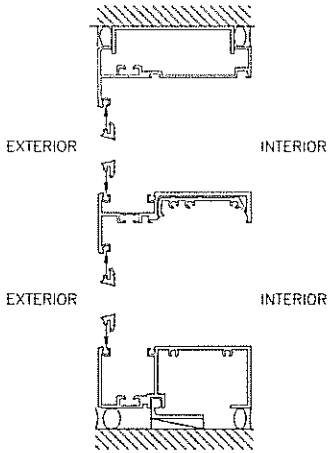

GASKETS SHOULD BE INSTALLED JUST PRIOR TO GLAZING.

GASKET LENGTH IS TO BE DAYLIGHT OPENING. CUT GASKETS LONG TO ALLOW FOR SOME "CROWD IN" DURING INSTALLATION. CROWD IN SHOULD BE 1/8" PER FOOT UP TO 8'-0", 1/4" PER FOOT OVER 8'-0".

JUST PRIOR TO INSTALLING GASKETS, APPLY SEALANT AT ALL HORIZONTAL TO VERTICAL CONNECTIONS AS SHOWN.

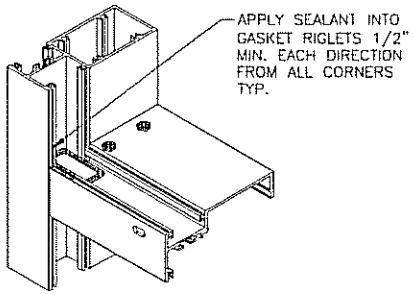

PUSH GASKETS INTO GASKET RIGLETS AS SHOWN.

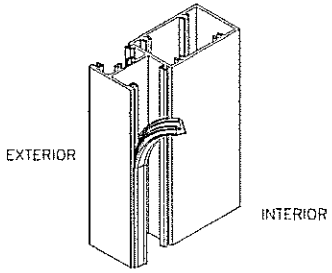

JUST PRIOR TO GLAZING, APPLY SEALANT TO ALL GASKET CORNERS.

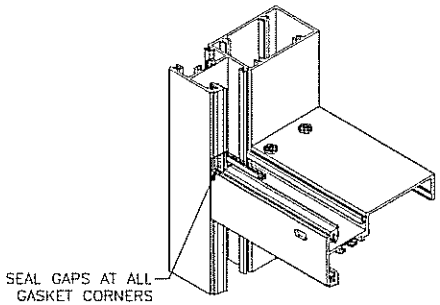

arcadia ARCADIA, INC.	TC-670 SYSTEM SCREW RACE FABRICATION AND INSTALLATION INSTR.	DATE: 08-19-08
		DRAWING:
		SHEET NO.: 4

11 – INSTALL GLASS

A. INSTALL SETTING BLOCKS. LOCATE SETTING BLOCKS AT TOP OF SETTING CHAIR PER THE SHOP DRAWINGS OR DEAD LOAD CHARTS.
B. PLACE ONE VERTICAL EDGE OF THE GLASS INTO THE DEEP GLAZING POCKET OF A VERTICAL MULLION.
C. SWING THE OPPOSITE EDGE OF THE GLASS INTO POSITION (ALIGNED WITH THE OPPOSING GLAZING POCKET) AND INTO THE OPPOSING POCKET AND REST GLASS ON THE SETTING BLOCKS.

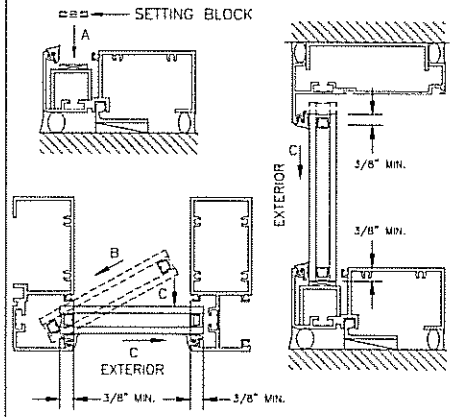

ADJUST GLASS SO THAT GLASS BITE IS 3/8" MIN.

NOTE: GLASS INSTALLATION IS SIMILAR AT ELEVATIONS WITH INTERMEDIATE HORIZONTALS.

12 – INSTALL GLASS STOPS

SNAP IN GLASS STOPS AS SHOWN.

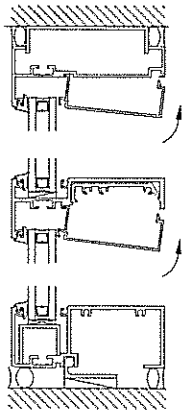

SPECIAL NOTE: APPLICATION OF SEALANT TO VERTICALS AT GLASS STOP CONTACT AREAS AS SHOWN IS REQUIRED TO MEET ASTM E331-93 FOR WATER PENETRATION (12 PSF) AND ASTM E-283-91 FOR AIR PENETRATION (.06 CFM PER SQ. FT.)

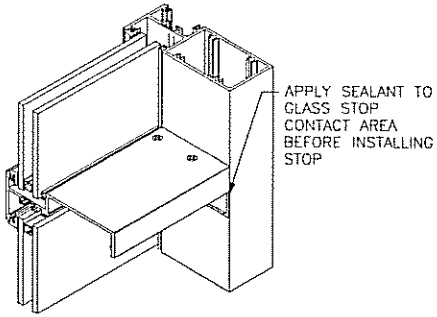

SEAL AT OUTSIDE GLAZED HORIZONTAL STOP SHOWN. DETAIL IS SIMILAR FOR ALL GLASS STOPS.

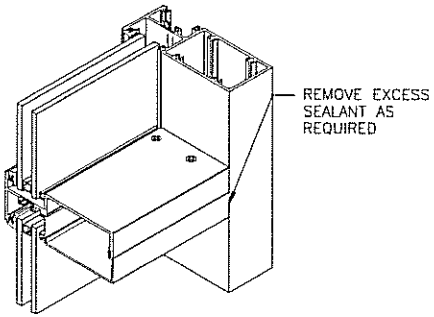

13 – INSTALL ANTI-WALK BLOCKS

ONE ANTI-WALK BLOCK SHOULD BE INSTALLED AT THE DEEP GLAZING POCKET OF EACH LITE OF GLASS.

A. FLATTEN THE ANTI-WALK BLOCK.
B. INSTALL THE BLOCK INTO THE GLAZING POCKET BY INSERTING BETWEEN THE GLASS AND FRAME.
C. ONCE IN POSITION, THE BLOCK WILL EXPAND AGAINST THE WALLS OF THE GLAZING POCKET AND PREVENT THE GLASS FROM SHIFTING INTO THE DEEP POCKET.

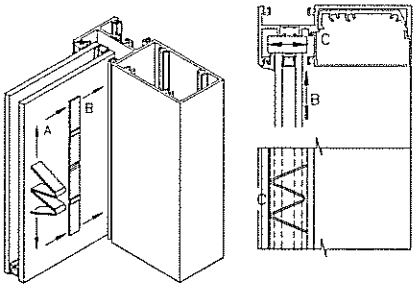

NOTE: IF DEGLAZING IS REQUIRED AFTER ANTI-WALK BLOCKS HAVE BEEN INSTALLED, USE A HOOK TOOL TO SLIDE THE BLOCK TO THE HORIZONTAL AND PULL IT OUT OF THE GLAZING POCKET.

14 – INSTALL REMAINING GASKETS

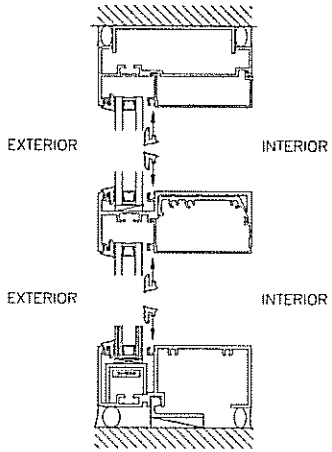

GASKET LENGTH IS TO BE DAYLIGHT OPENING. CUT GASKETS LONG TO ALLOW FOR SOME "CROWD IN" DURING INSTALLATION. CROWD IN SHOULD BE 1/8" PER FOOT UP TO 8'-0", 1/4" PER FOOT OVER 8'-0".

JUST PRIOR TO INSTALLING GASKETS, APPLY SEALANT AT ALL HORIZONTAL TO VERTICAL CONNECTIONS AS SHOWN.

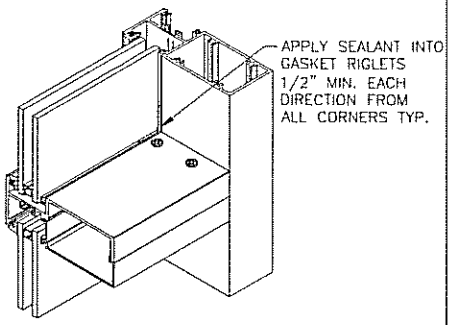

arcadia ARCADIA, INC.	TC-670 SYSTEM SCREW RACE FABRICATION AND INSTALLATION INSTR.	DATE: 08-19-08
		DRAWING:
		SHEET NO.: 5

USING A VINYL ROLLER, INSTALL THE REMAINING EXTERIOR/INTERIOR GASKETS.

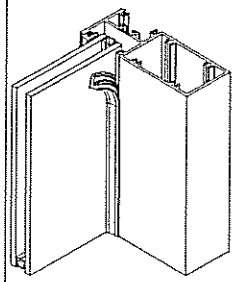

NOTES:
THE HORIZONTAL GASKETS SHOULD BE INSTALLED FIRST, THEN THE VERTICAL GASKETS.

THE USE OF A VINYL ROLLER IS HIGHLY RECOMMENDED.

GASKETS MAY SHRINK OVER TIME – DO NOT "STRETCH" GASKETS DURING INSTALLATION.

GASKETS MUST RUN CONTINUOUS – DO NOT SPLICE GASKETS.

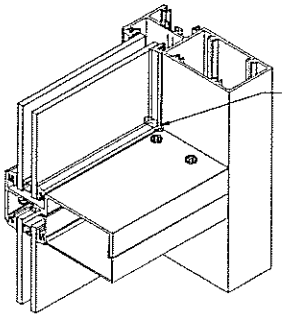

15 – INSTALL FACE CAP

SNAP IN VERTICAL AND HORIZONTAL FACE CAP AS SHOWN.

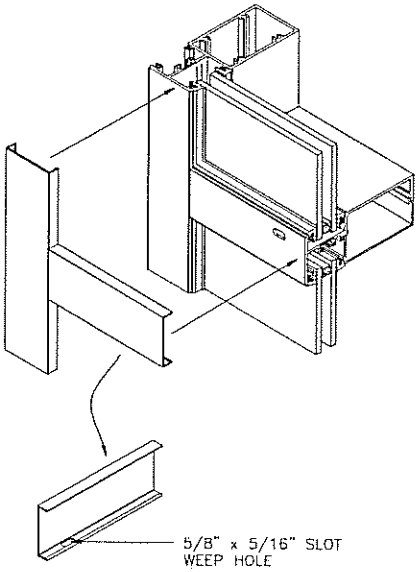

arcadia ARCADIA, INC.	TC-670 SYSTEM SCREW RACE FABRICATION AND INSTALLATION INSTR.	DATE: 08-19-08
		DRAWING:
		SHEET NO.: 6

Fenestration Testing Laboratory, Inc.

10235 8th Street • Rancho Cucamonga, CA 91730 • PH. (909) 477-4343 • FAX (909) 477-4348

TESTED FOR

ARCADIA, INC.
2301 E. Vernon Ave.
Vernon, CA 90058

1.0 PURPOSE

The purpose of this report is to present the testing methods employed and test results obtained during the performance testing of one (1) **Aluminum Storefront System** described in paragraph 4.0 of this report.

2.0 TEST REFERENCES

2.1 ASTM E 283 - Air Infiltration
2.2 ASTM E 331 - Water Penetration
2.3 ASTM E 330 - Uniform Load Structural
2.4 Seismic Lateral Test Parallel to Plane of Wall
2.5 Seismic Racking – UBC 1997

3.0 SUMMARY

The test results in paragraph 5.0 indicate that the test sample described in paragraph 4.0 of this report complied with the performance requirements of the above referenced specifications.

4.0 SAMPLE SUBMITTED

SERIES: 2-1/4" x 5-5/8" (TC-670) Offset Glazed System for 1" Glazing (Screw Spline System)

CONFIGURATION: Three (3) bays wide; Bay to far left (outside view) 3 lites high; Bay at center and far right were each two lites high.

FRAME SIZE: 147.00" x 68.00"

FIXED LITES: As shown on the attached Elevation Drawing (Outside View).
Daylight opening for the bottom row was 46.00" x 32.25" each lite.
Daylight opening for the upper lite at the center and right bays was 46.00" x 59.00" each lite.
Daylight opening for the center and upper lite at the left bay was 46.00" x 28.38" each lite.

GLASS: All six (6) insulated glass units were 1" overall with ¼" annealed glass on both sides and a 1/2" aluminum air spacer.

GLAZING: Each of the lites rested on 4" long rubber setting blocks (two per lite). At the sill, the rubber setting block sat on an inverted 'U' shaped aluminum extrusion which served as a riser block for the glass. All glass was set from the interior onto push-in gasket. Aluminum glazing stop was snapped in at the top of each lite from the interior. The same gasket used on the exterior side was rolled-in on the interior the full perimeter of each lite.
Anti-walk block was set in vertical sides of each lite.

WEATHERING: None

WEEPAGE: The following contained 5/8" x 7/16" weep slots with foam baffle:

A. The sill – two per bay draining vertically. The silicone perimeter seal was adjusted accordingly in line with each of these weep so as to not obstruct drainage.
B. The left bay upper intermediate horizontal was zone weeped with one weep at each end of the outside face. This horizontal also contained a snap-in cover which contained one vertical weep at each end.
C. The right bay intermediate horizontal – one weep at each end. Foam weep baffles were inserted into each weep hole.

CONSTRUCTION: Each intermediate horizontal snapped onto 0.75" wide aluminum block. Each aluminum block was fastened to its respective vertical with three #12 x 1.5" PPH screws. Each of the two intermediate verticals was fastened to the sill and head with four #10 x 1" PPH screws at each end. The jamb verticals were fastened to the head and sill with two #10 x 1" screws at each end.
The end dam at the top and bottom corners were fastened to the frame with screws into the jamb.

Aluminum water diverters were set in sealant at each end of each intermediate horizontal. Where zone weeped, the entire glazing pocked was sealed so as to not allow water to drain down verticals. Where not zone weeped, a gap was left to allow water to drain down the verticals to the sill.

A snap-in beauty cover was applied over the left jamb vertical, the left intermediate vertical, and the upper intermediate horizontal in the left bay.

CAULKING: The following were sealed:

1) The end dams full profile.
2) Metal to metal butt joints were sealed as indicated on drawings.
3) All glazing gasket butt joints, interior and exterior, were sealed with silicone. Sealant was also applied in the gasket raceway 2" in each direction at each corner.
4) All aluminum shear blocks to their respective verticals full profile.
5) All water diverts to intermediate horizontals and verticals in the glazing pockets.
6) Each jamb to sill glazing pocket was fully sealed.
7) All screw head at mechanically joined corners and butt joints except for the screws anchoring the head channel to the wooden buck.

Refer to the attached drawings for a detailed description of caulking.

ANCHORING: The sill pan was anchored to the 2" x 10" wood rough opening by fitting over an aluminum full length 'L' shaped extrusion. This extrusion was shimmed and fastend to the rough opening with ¼" x 2" Drill Flex fasteners at 2 per bay.

5.0 TEST PROCEDURES AND RESULTS

5.1 All testing procedures were performed in accordance with the performance requirements of the test specifications referenced in paragraph 2.0 of this report.

5.2 TEST RESULTS

TEST DESCRIPTION	MEASURED	ALLOWED
Preliminary Loading to 50% Maximum Positive Design Pressure (ASTM E 330)		
13.0 PSF POS	No Damage	No Damage

5.2 **TEST RESULTS (Cont'd)**

TEST DESCRIPTION	MEASURED	ALLOWED
Air Infiltration (ASTM E 283)		
1.57 PSF	0.01 CFM/Ft²	0.06 CFM/Ft²
6.24 PSF	0.04 CFM/Ft²	0.06 CFM/Ft²
Water Penetration (ASTM E 331)		
12.0 PSF	No Leakage	No Leakage
Uniform Load Structural Deflection at Design Load 26 PSF (ASTM E 330)		
For Intermediate Vertical:		
26.0 PSF POS	0.17" Deflection	0.53" Deflection
26.0 PSF NEG	0.17" Deflection	0.53" Deflection
Uniform Load Structural Overload 150% of 26 PSF (ASTM E 330)		
39.0 PSF POS	0.25" Deflection	0.53" Deflection
39.0 PSF NEG	0.24" Deflection	0.53" Deflection
Uniform Load Structural Deflection at Design Load 47 PSF (ASTM E 330)		
For Intermediate Vertical:		
47.0 PSF POS	0.28" Deflection	0.53" Deflection
47.0 PSF NEG	0.26" Deflection	0.53" Deflection
Uniform Load Structural Overload 150% of 47 PSF (ASTM E 330)		
70.5 PSF POS	0.41" Deflection	0.53" Deflection
70.5 PSF NEG	0.40" Deflection	0.53" Deflection
Seismic Lateral Test Parallel to Plane of Wall		
3 Cycles of ¾" Racking	No Damage	No Damage
Seismic Lateral Test Parallel to Plane of Wall		
3 Cycles of 1 ½" Racking	No Damage	No Damage

5.3 **Seismic Racking - UBC 1997**

1 Cycle of 2" Racking	No Damage	No Damage
1 Cycle of 3" Racking	No Damage	No Damage

For a complete description of the tested sample refer to the attached cross section drawings.
Assembly and cross section drawings of frame members are on file and have been compared to the sample submitted.
Test sample sections, drawings and a copy of this report will be retained at the test laboratory for four years.
Note: The attached stamped drawings totaling thirteen (13) pages have been verified for accuracy and form part of this report. Without these drawings, this report is null and void.
This test report may not be modified in any way without the written consent of Fenestration Testing Laboratory.
The preceding test results were obtained by using the applicable ASTM Test Methods.

Testing Completed: June 11, 2008
Report Completed: June 12, 2008

Pete Cruz
Test Engineer

Jim Cruz
Testing Manager

ARCADIA®, INC. 3225 E. Washington Blvd. Vernon, CA 90023 TEL. (323) 269-7300	2 1/4" x 5 5/8" FOR 1" GLASS TC-670 W/O FACE COVER	
	DRAWN BY: MARK M.	DATE: 04/07/08
	TESTED BY:	DATE:
	DWG. #: C-1	SHEET 1 OF 13

2 $\frac{1}{4}$" x 5 $\frac{5}{8}$" OFFSET GLAZING FOR 1" GLASS (TC-670 W/O FACE COVER) MOCK UP (SCREW SPLINE SYSTEM)

MOCK UP GENERAL RULES

SYSTEM: 2$\frac{1}{4}$" x 5$\frac{5}{8}$" OFFSET GLAZED SYSTEM
- 1" GLAZING

TEST SEQUENCE:

1. PRE LOAD:
   - PER ASTM E-330
   - 13 PSF (50% DESIGN LOAD)
2. AIR INFILTRATION:
   - PER ASTM E-283
   - MEASURED AT 6.24 PSF & 1.57 PSF
   - FIXED WALL AREA = 100 SQUARE FOOT
   - MAX. ALLOWANCE. = 0.06 CFM. PER SQUARE FOOT OF FIXED WALL AREA
3. STATIC WATER PENETRATION:
   - PER ASTM E331
   - TESTED: 12 PSF
4. UNIFORM STRUCTURAL DEFLECTION
   - PER ASTM E330
   - 26 PSF DESIGN LOAD
   - 47 PSF DESIGN LOAD
   AT MIN., (L/175 OR 3/4" WHICHEVER IS LESS)
5. UNIFORM STRUCTURAL OVERLOAD
   - PER ASTM E330
   - 39 PSF
   - 70.5 PSF
   AT MIN., (L/175 OR 3/4" WHICHEVER IS LESS)
6. SEISMIC RACKING
   - PER PHASE I AT DESIGN FLOOR DRIFT
   - 3 CYCLES AT 3/4" NO DAMAGE
7. SEISMIC RACKING
   - PER PHASE II AT 200% DESIGN FLOOR DRIFT
   - 3 CYCLES AT 1 1/2" NO DAMAGE

FENESTRATION TESTING LAB
A08SF-053
6/27/08

SEISMIC RACKING '97 UBC TEST SEQUENCE:

The bottom Perimeter frame supporting the specimen was displaced laterally to the left 2 inches, held for a minimum of ten (10) seconds, returned to zero, and then displaced to the right 2 inches, held for a minimum of ten (10) seconds, returned to zero.

The bottom Perimeter frame supporting the specimen was displaced laterally to the left 3 inches, held for a minimum of ten (10) seconds, returned to zero, and then displaced to the right 3 inches, held for a minimum of ten (10) seconds, returned to zero.

ARCADIA, INC. 3225 E. Washington Blvd. Vernon, CA 90023 TEL. (323) 269-7300	2 1/4" x 5 5/8" FOR 1" GLASS TC-670 W/O FACE COVER	
	DRAWN BY: MARK M.	DATE: 04/07/08
	TESTED BY:	DATE:
	DWG. #: E1	SHEET 2 OF 13

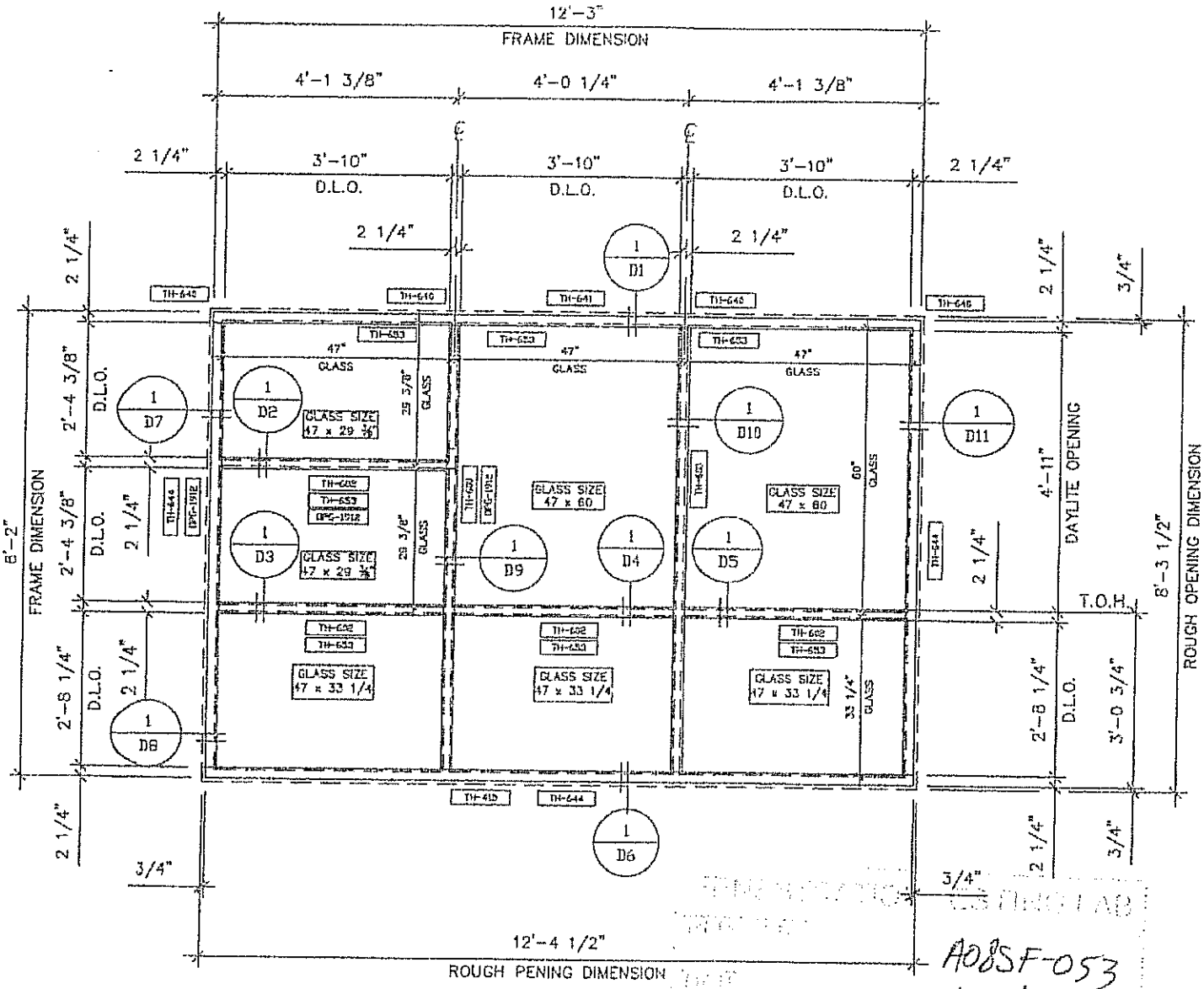

A08SF-053
6/27/08

1 / MU-1 MOCK UP FRAME ELEVATION
2¼"x 5 5/8" (TC-670) OFFSET GLAZED SYSTEM
SCALE : 1" = 1' - 0"

ARCADIA®, INC. 3225 E. Washington Blvd. Vernon, CA 90023 TEL. (323) 269-7300	2 1/4" x 5 5/8" FOR 1" GLASS TC-670 W/O FACE COVER	
	DRAWN BY: MARK M.	DATE: 04/07/08
	TESTED BY:	DATE:
	DWG. #: D1	SHEET 3 OF 13

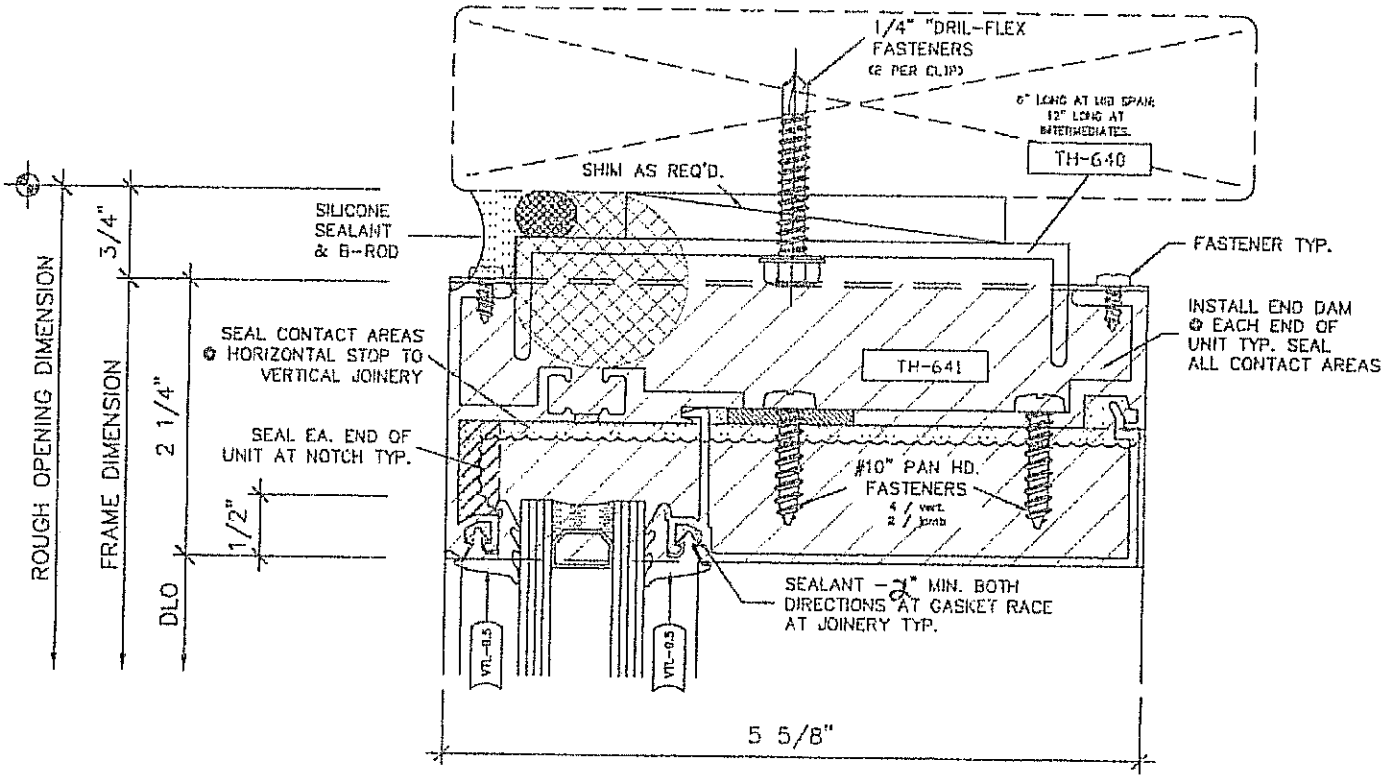

1 / D1 HEAD DETAIL
Arch Ref: NONE

[illegible] TESTING LAB
A08SF-053
6/27/08

ARCADIA® INC. 3225 E. Washington Blvd. Vernon, CA 90023 TEL. (323) 269-7300	2 1/4" x 5 5/8" FOR 1" GLASS TC-670 W/O FACE COVER	
	DRAWN BY: MARK M.	DATE: 04/07/08
	TESTED BY:	DATE:
	DWG. #: D2	SHEET 4 OF 13

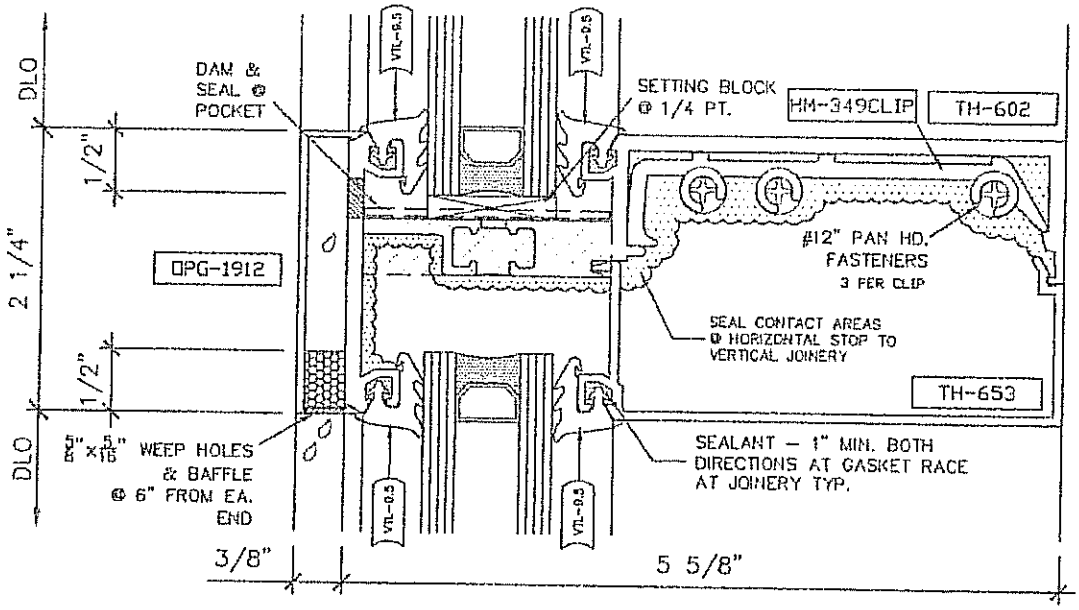

1 / D2 ZONE DAM
INTERMEDIATE HORIZ. DETAIL
Arch Ref: NONE

A08SF-053
6/27/08

ARCADIA®, INC. 3225 E. Washington Blvd. Vernon, CA 90023 TEL. (323) 269-7300	2 1/4" x 5 5/8" FOR 1" GLASS TC-670 W/O FACE COVER	
	DRAWN BY: MARK M.	DATE: 04/07/08
	TESTED BY:	DATE:
	DWG. #: D3	SHEET 5 OF 13

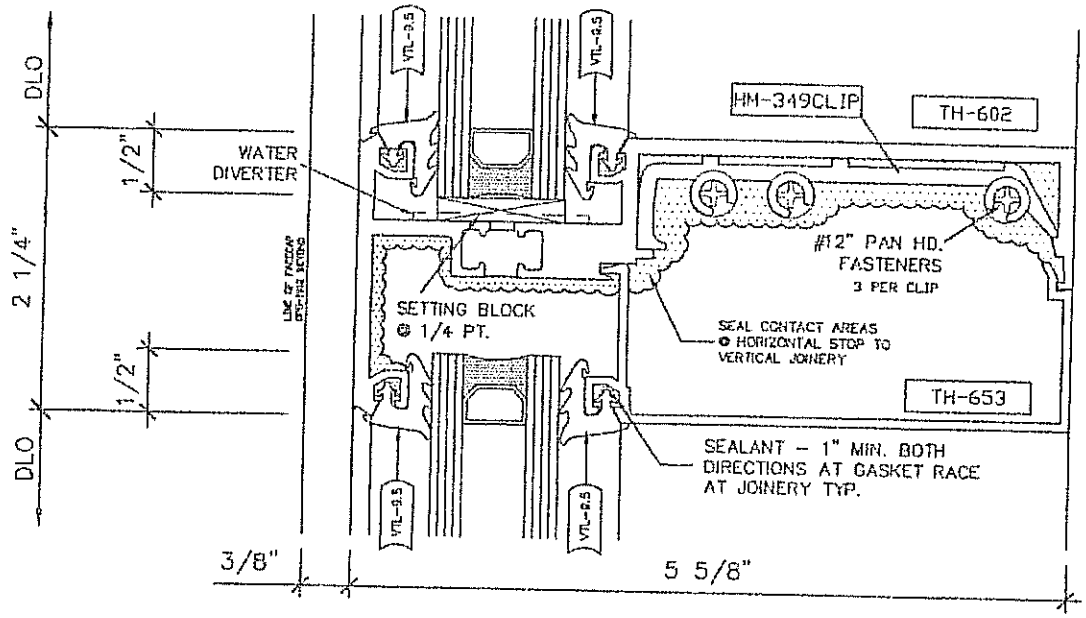

1 / D3 DIVERTED @ POCKET INTERMEDIATE HORIZ. DETAIL

Arch Ref: NONE

A08SF-053
6/27/08

ARCADIA®, INC. 3225 E. Washington Blvd. Vernon, CA 90023 TEL. (323) 269-7300	2 1/4" x 5 5/8" FOR 1" GLASS TC-670 W/O FACE COVER	
	DRAWN BY: MARK M.	DATE: 04/07/08
	TESTED BY:	DATE:
	DWG. #: D4	SHEET 6 OF 13

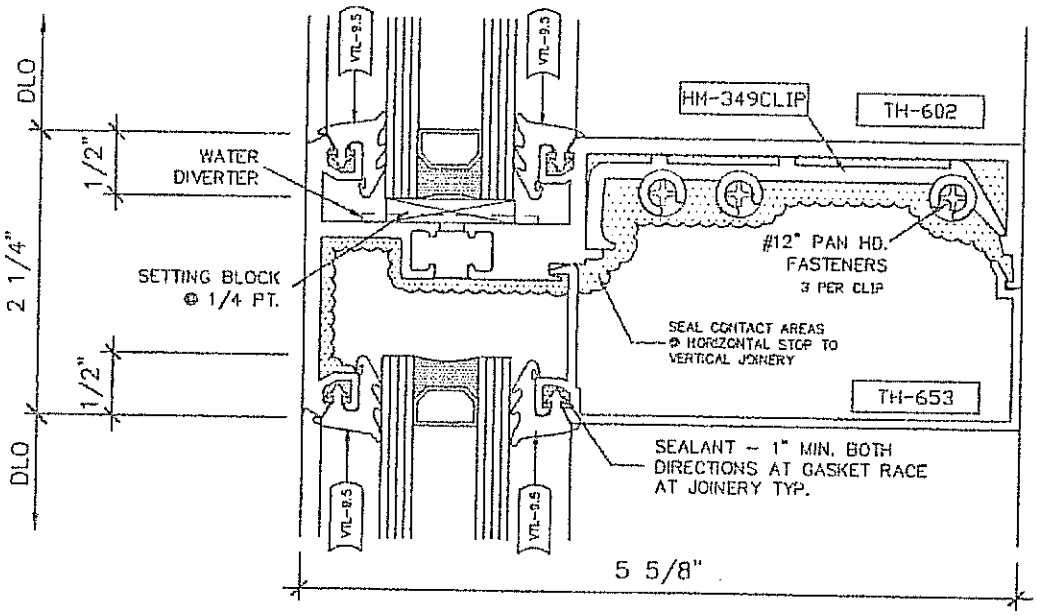

1 / D4 — DIVERTED @ POCKET INTERMEDIATE HORIZ. DETAIL

Arch Ref: NONE

A08SF-053
6/27/08

ARCADIA®, INC. 3225 E. Washington Blvd. Vernon, CA 90023 TEL. (323) 269-7300	2 1/4" x 5 5/8" FOR 1" GLASS TC-670 W/O FACE COVER	
	DRAWN BY: MARK M.	DATE: 04/07/08
	TESTED BY:	DATE:
	DWG. #: D5	SHEET 7 OF 13

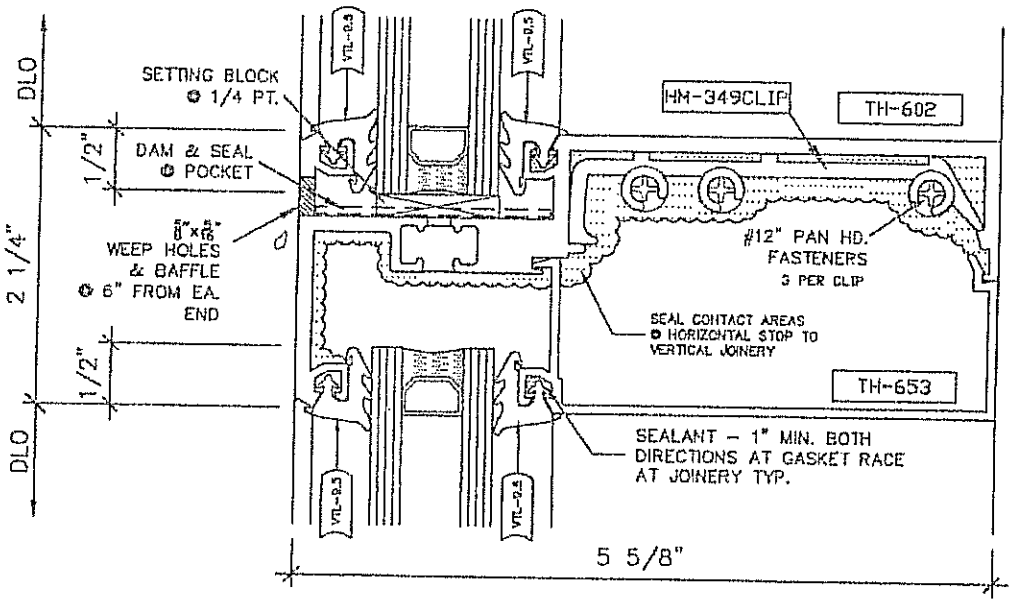

1 / D5 ZONE DAM
INTERMEDIATE HORIZ. DETAIL
Arch Ref: NONE

A08SF-053
6/27/08

ARCADIA®, INC. 3225 E. Washington Blvd. Vernon, CA 90023 TEL. (323) 269-7300	2 1/4" x 5 5/8" FOR 1" GLASS TC-670 W/O FACE COVER	
	DRAWN BY: MARK M.	DATE: 04/07/08
	TESTED BY:	DATE:
	DWG. #: D6	SHEET 8 OF 13

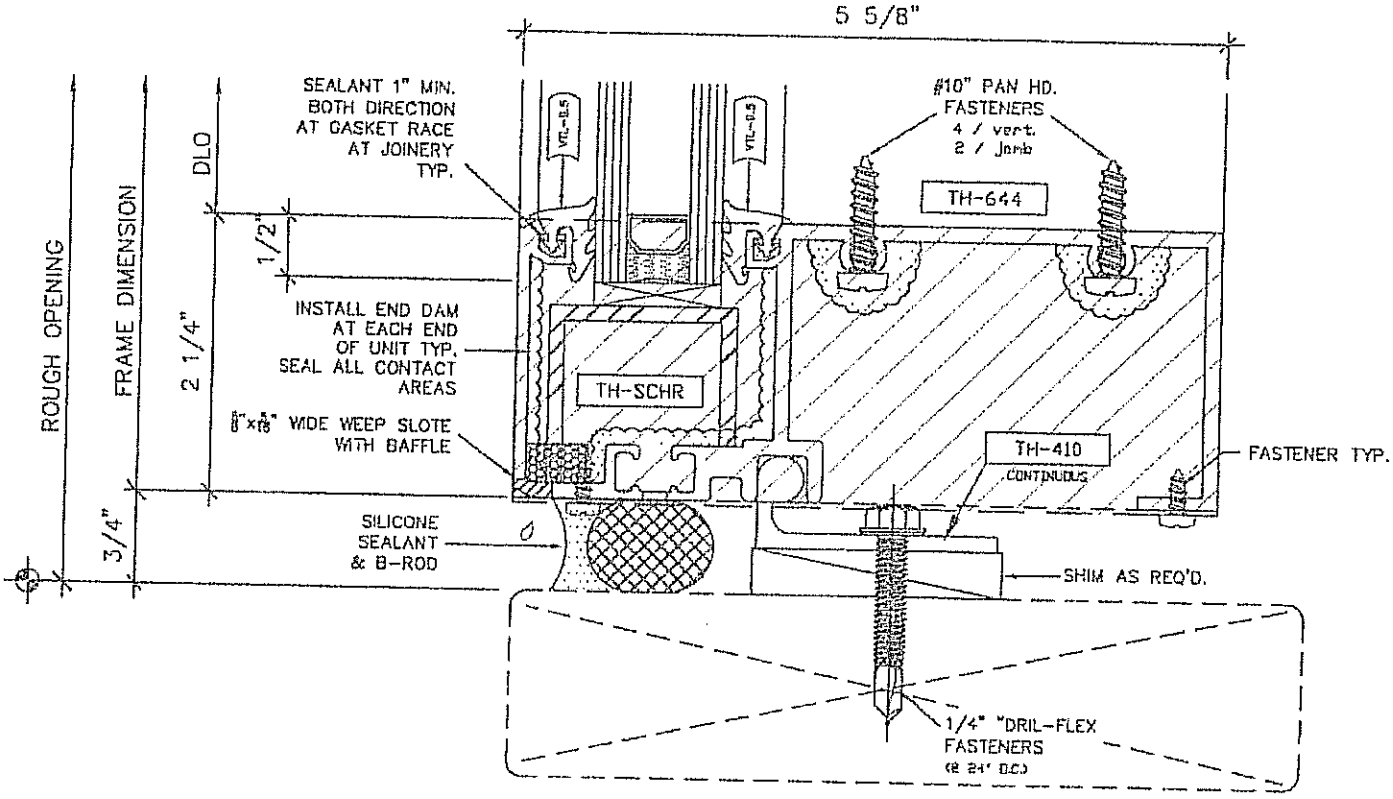

1 / D6 SILL DETAIL
Arch Ref: NONE

A08SF-053
6/27/08

ARCADIA®, INC. 3225 E. Washington Blvd. Vernon, CA 90023 TEL. (323) 269-7300	2 1/4" x 5 5/8" FOR 1" GLASS TC-670 W/O FACE COVER	
	DRAWN BY: MARK M.	DATE: 04/07/08
	TESTED BY:	DATE:
	DWG. #: D7	SHEET 9 OF 13

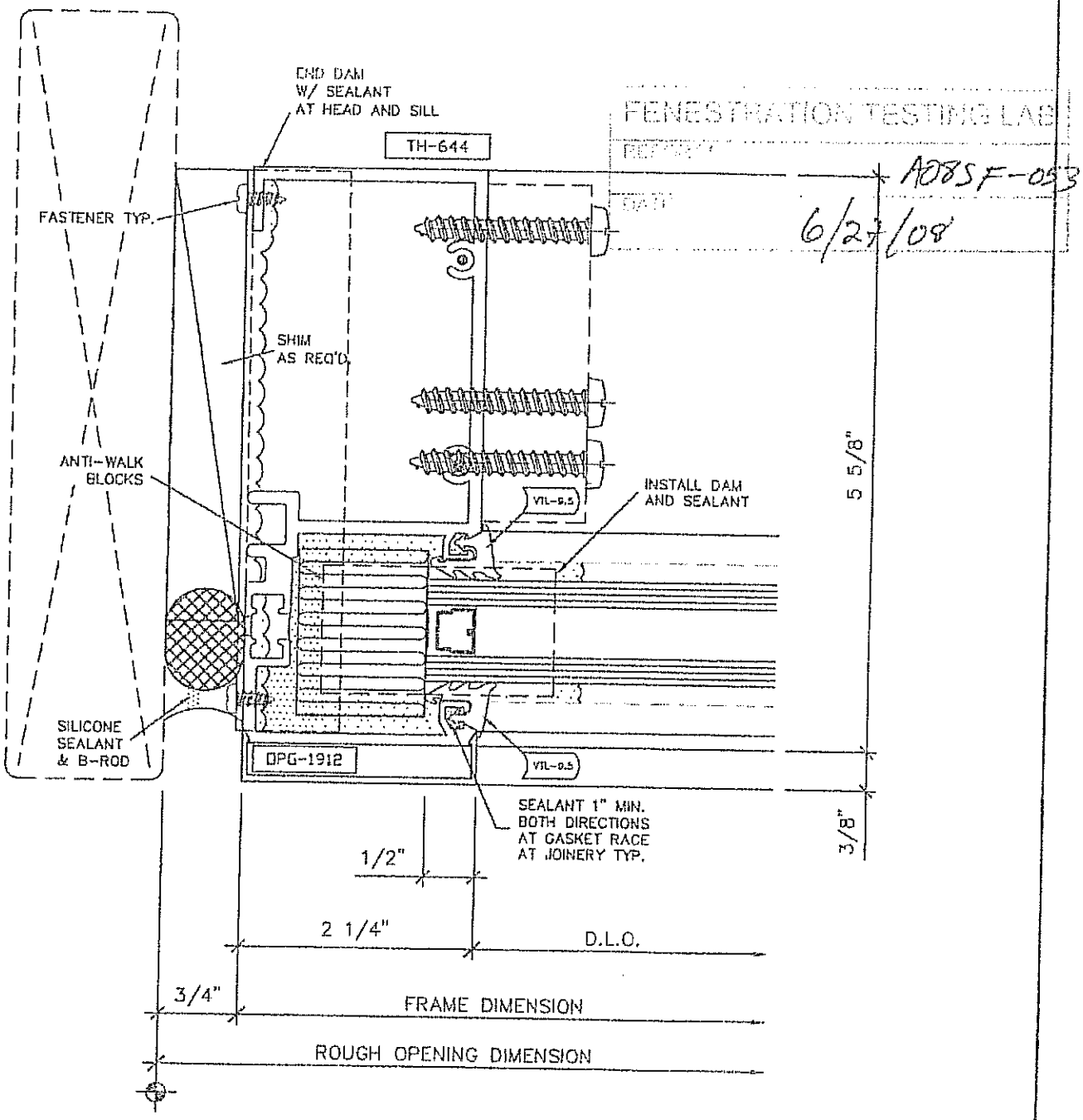

FENESTRATION TESTING LAB
REPORT #
DATE

A08SF-053
6/27/08

1 / D7 JAMB DETAIL @ ZONE DAMED HORIZONTAL
Arch Ref: NONE

ARCADIA®, INC. 3225 E. Washington Blvd. Vernon, CA 90023 TEL. (323) 269-7300	2 1/4" x 5 5/8" FOR 1" GLASS TC-670 W/O FACE COVER	
	DRAWN BY: MARK M.	DATE: 04/07/08
	TESTED BY:	DATE:
	DWG. #: D8	SHEET 10 OF 13

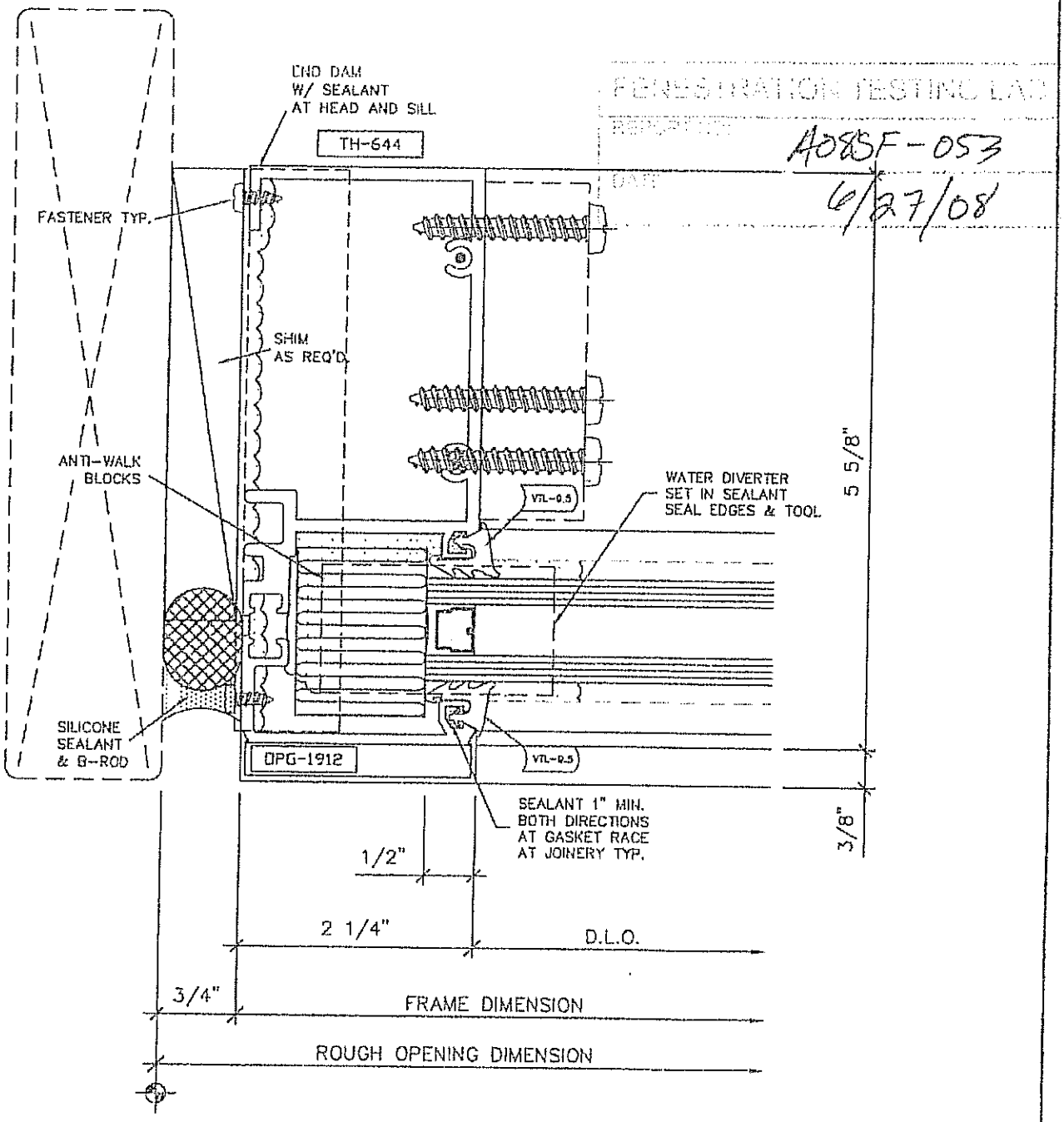

PENETRATION TESTING LAB
REPORT NO. A08SF-053
DATE 6/27/08

1 / D8 JAMB DETAIL @ WATER DIVERTER HORIZONTAL
Arch Ref: NONE

ARCADIA®, INC.
3225 E. Washington Blvd. Vernon, CA 90023
TEL. (323) 269-7300

2 1/4" x 5 5/8" FOR 1" GLASS
TC-670 W/O FACE COVER

DRAWN BY: MARK M.	DATE: 04/07/08
TESTED BY:	DATE:
DWG. #: D9	SHEET 11 OF 13

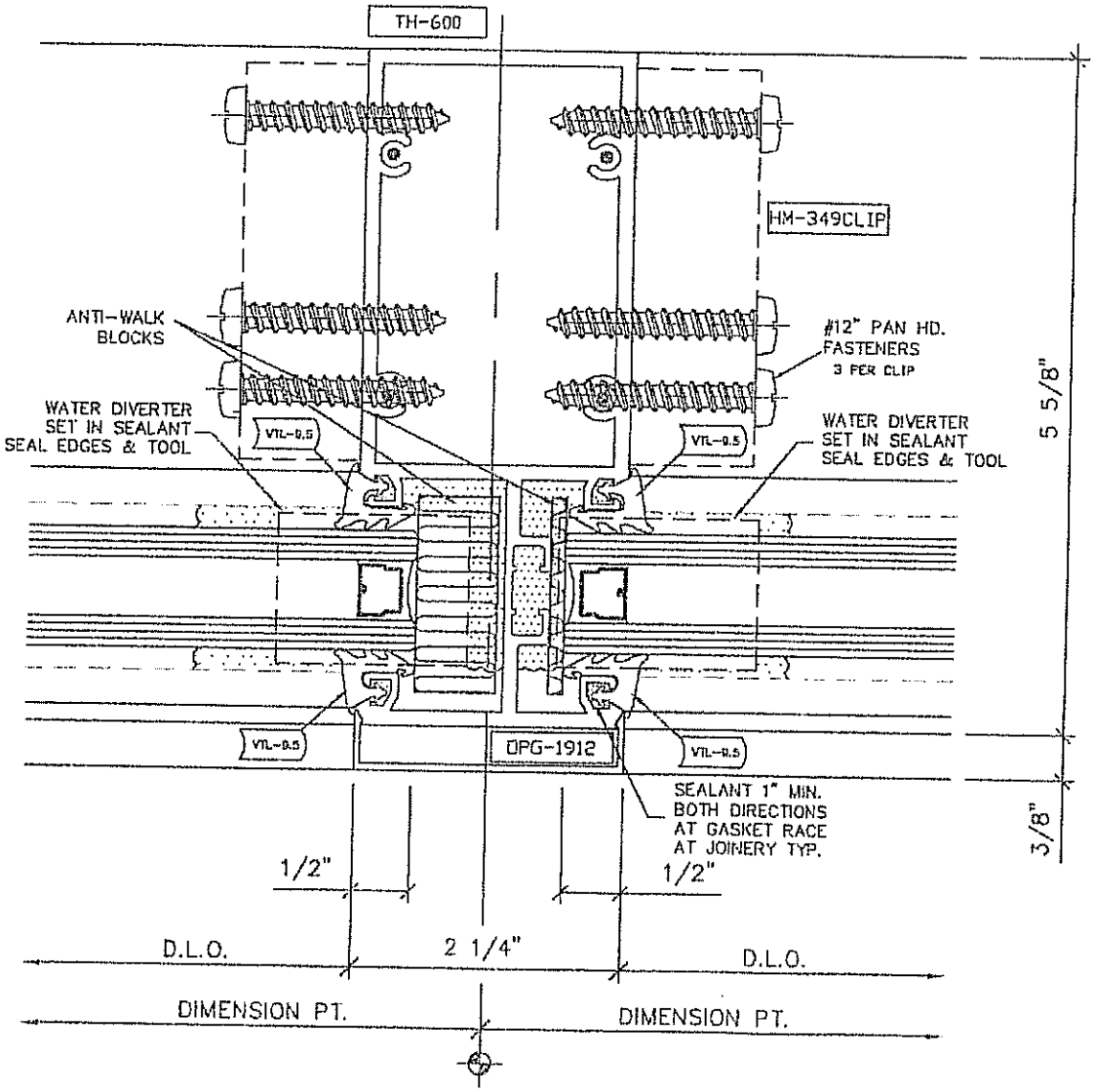

1 / D9 TYP. INT. MULLION DETAIL
Arch Ref: NONE

A08SF-053
6/27/08

ARCADIA®, INC.
3225 E. Washington Blvd. Vernon, CA 90023
TEL. (323) 269-7300

2 1/4" x 5 5/8" FOR 1" GLASS
TC-670 W/O FACE COVER

DRAWN BY: MARK M.	DATE: 04/07/08
TESTED BY:	DATE:
DWG. #: D10	SHEET 12 OF 13

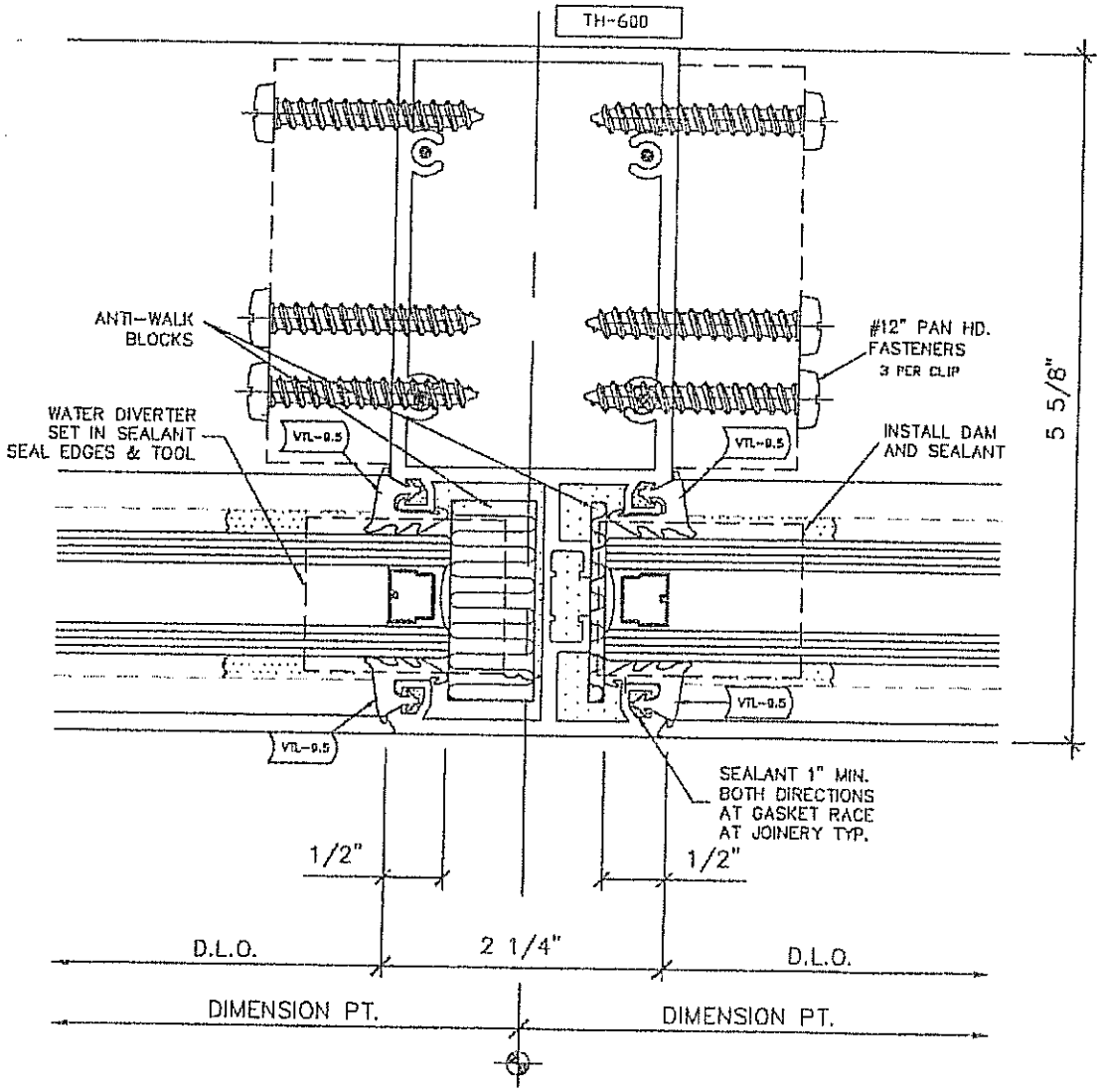

1 / D10 TYP. INT. MULLION DETAIL
Arch Ref: NONE

A085F-053
6/27/08

ARCADIA®, INC. 3225 E. Washington Blvd. Vernon, CA 90023 TEL. (323) 269-7300	2 1/4" x 5 5/8" FOR 1" GLASS TC-670 W/O FACE COVER	
	DRAWN BY: MARK M.	DATE: 04/07/08
	TESTED BY:	DATE:
	DWG. #: D11	SHEET 13 OF 13

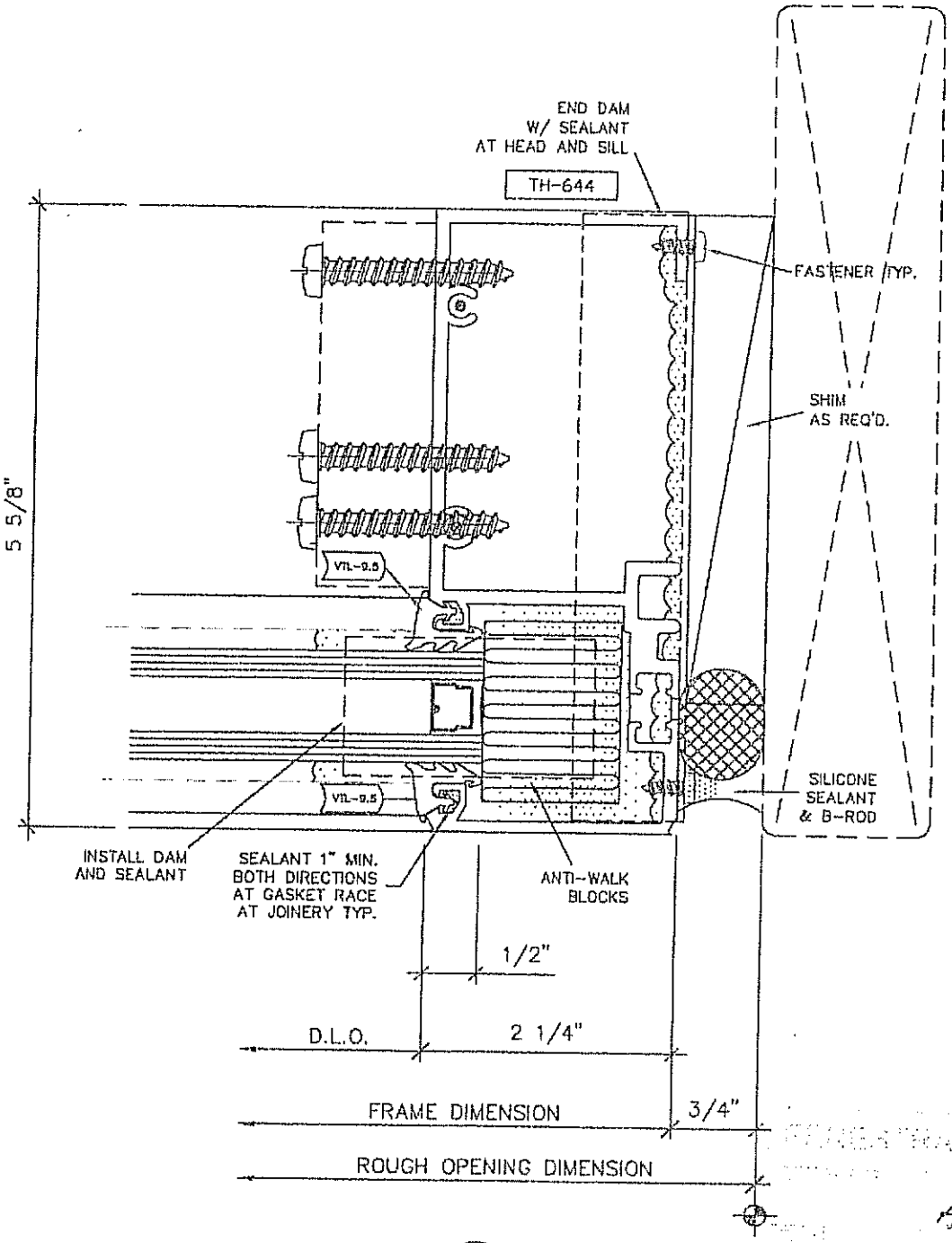

1 / D11 JAMB DETAIL
Arch Ref: NONE

4085F-053
6/27/08

Product Comparison Thermal Windows
Arcadia T200 vs. CRL 7200

	Line by line comparison	Arcadia T200	CRL 7200
A.	Profile	2"	2"
B.	Material Domestic *	Aluminum 6063 T-6*	Aluminum 6063 T-6
C.	Glazing	1"	1"
D.	Gasket	EPDM	EPDM
E.	Air Infiltration	0.10 cfm/ft2	0.10 cfm/ft2
F.	Water Resistance	12 PSF	12 PSF
G.	Perfomance Class *	AW	C
H.	Performance Grade	80	75
I.	Uniform load	ASTM E 330	ASTM E 330
J.	Seismic Testing	Yes	Yes
K.	Recycled Content	Yes	Yes $
L.	NFRC (Title 24)	Yes	?
M.	Regional Materials	Yes	NO
N.	LEED Credits MR4 (recycled content)	Yes	Yes
O.	LEED Credit MR5 (Locally extruded)	Yes	No
P.	Finish: Painted with 10 year warranty available	Yes	?
Q.	Year Established	1930	1960
* The AW rating far exceeds the C rating			

SECTION 08520 ALUMINUM WINDOWS

Part 1 – General

1.01 Summary
- A. Section includes:
  - 1. Aluminum Windows
- B. Related Sections:

1.02 References
- A. American Architectural Manufacturers Association (AAMA)
- B. American Society for Testing and Materials (ASTM)
- C. Aluminum Association (AA)
- D. National Wood Window & Door Association (NWWDA)
- E. California Association of Window Manufacturers (CAWM)

1.03 System Description
- A. General: In addition to requirements shown or specified, comply with:
  - 1. Applicable provisions of AAMA Windows and Sliding Glass Doors Manual for design, materials, fabrication and installation of component parts.
- B. Design Requirements: Arcadia T200 Series AW-80 (thermal) Heavy Commercial Awning and Hopper Windows 2-inch depth. Hinged compression sealed aluminum windows. Suitable for outside or inside glazing.
- C. Performance Requirements: Each assembly shall be tested by a recognized testing laboratory or agency in accordance with specified test methods.
  - 1. Conformance to AW-80 specifications in AAMA/NWWDA 101/I.S. 2-97.
    - a. Air Infiltration: Accordance with ASTM E 283 at a static air pressure difference of 6.24 psf. Air infiltration shall not exceed .30 cfm per square foot.
    - b. Water Resistance: Accordance with ASTM E 331/ASTM E 547 at a static air pressure difference of 12 psf. No water leakage.
    - c. Uniform Load Structural: Operable when tested per ASTM E 330 at a static air pressure difference of 120 psf.
    - d. Component testing: Accordance with procedures described in AAMA/NWWDA 101/I.S. 2-97.
    - e. Forced Entry Resistance: All windows shall conform to CAWM 301-90.
    - f. Condensation Resistance Test: (CRF) when tested in accordance with AAMA 1503.1-88, the condensation resistance factor shall not be less than 51.
    - g. Thermal Transmittance Test: Accordance with AAMA 1503.1-88, (U-Value) not more than .59 BTU/hr/sf/°F.
    - h. Thermal Movements: Allow thermal movement resulting from the following maximum change (range) in ambient temperature.
      - (a) 120 deg F (67 deg C), ambient; 180 deg F (100 deg C), material surfaces.

1.04 Quality Assurance
- A. Single Source Responsibility:
  - 1. Obtain entrances, storefronts, ribbon walls, window walls, curtain walls, window systems, and finish through one source from a single manufacturer.
- B. Provide test reports from AAMA accredited laboratories certifying the performances as specified in 1.03.

1.05 Warranty
- A. Warranted against failure and/or deterioration of metals due to manufacturing process for a period of two (2) years.

Part 2 – Products

2.01 Manufacturers
- A. Acceptable Manufacturers:
  - 1. Arcadia, Inc., 3225 East Washington Blvd., Vernon, CA. Telephone 323/269-7300, Fax 323/269-7390.
- B. Acceptable Products:
  - 1. Arcadia Inc., T200 Series (thermal) Heavy Commercial Awning and Hopper Windows, 2-inch depth.

2.02 Materials
- A. Extruded aluminum profiles 6063-T6 alloy and temper (ASTM B221 G.S. 10A-T6).
- B. All framing members .125 minimum wall thickness.
- C. Heavy-duty four bar hinges shall be stainless steel only, with asymmetric end caps, and adjustable limit stops. Lock and latches cast white bronze, US-25D finish.
- D. Weatherstrip EPDM bulb type conforming to ASTM D2000 AA515 and shall be keyed into extruded grooves.
- E. Back glazing two-sided adhesive, 15 lbs./ft.^{3} density, polyethylene tape. Glazing wedges shall be EPDM or Santoprene.
- F. Screens made of extruded aluminum frame and screened with either 18 x 14 aluminum or fiber mesh.
- G. Thermal barrier material poured-in-place two part polyurethane.

2.03 Finish
- 2. An Architectural Class II or I color anodic coating conforming with AA-M12C22A34/AA-M12C22A44.
  - a. Anodized finish color shall be Colornodic _____. (AB1 Light Champagne, AB2 Champagne, AB3 Light Bronze, AB4 Medium Bronze, AB5 Standard Medium Bronze, AB6 Dark Bronze, AB7 Standard Dark Bronze, AB8 Black, AG2 Gold.)

(or) 1. An Architectural Class II or I anodic coating conforming with AA-M12C22A31/AA-M12C22A41.
  - a. Anodize finish color shall be Colornodic _____ (#11 Clear)

(or) 1. Fluorocarbon Coating: AAMA 2605.2.
  - a. Resin: 70% PVDF Kynar 500/Hylar 5000.
  - b. Substrate: cleaned and pretreated with chromium phosphate.
  - c. Primer: Manufacturer's standard resin base compatible coating. Dry film thickness.
    - (a) Extrusion: Minimum 0.20 mil.
  - d. Color Coat: 70% PVDF, dry film thickness.
    - (a) Extrusion: 0.20 mil.
  - e. Color: As selected by Architect.
  - f. Acceptable Coatings Manufacturers:
    - (a) PPG Industries, Inc.
    - (b) Valspar Corporation
    - (c) BASF

2.04 Fabrication
- A. Frame components mitered, reinforced extruded corner key, hydraulically crimped, and "cold welded."
- B. All ventilator extensions tubular, each corner mitered, reinforced extruded corner key, hydraulically crimped, and "cold welded."
- C. All corners weather sealed with an elastomeric sealant.

Part 3 – Execution

3.01 Examinations
- A. Examine conditions and verify substrate conditions are acceptable for product installation.

3.02 Installation
- A. Install in accordance with approved shop drawings and manufacturers installation instructions.

3.03 Field Quality Control
- A. Contractor's responsibility to make all necessary final adjustments to attain normal operation of each window and its mechanical hardware.

END OF SECTION

T200 Series

Description: Heavy Commercial window (Inside Set)
Function: Wiindow
Detail: Fixed, Casement, Awning, Hopper
Scale: 3" = 1'-0"

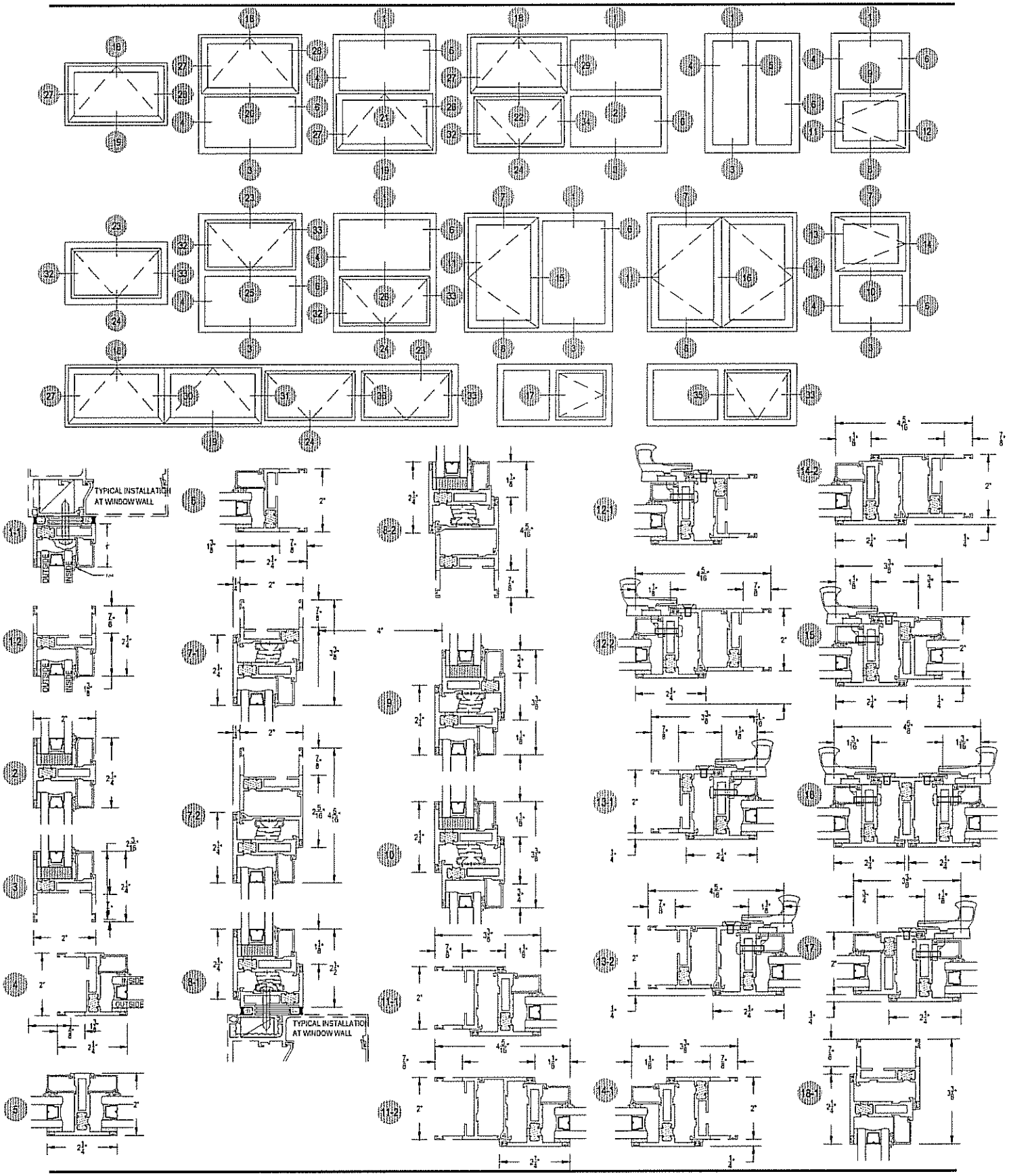

T200 Series

Description: Heavy Commercial window (Inside Set)
Function: Wiindow
Detail: Fixed, Casement, Awning, Hopper
Scale: 3" = 1'-0"

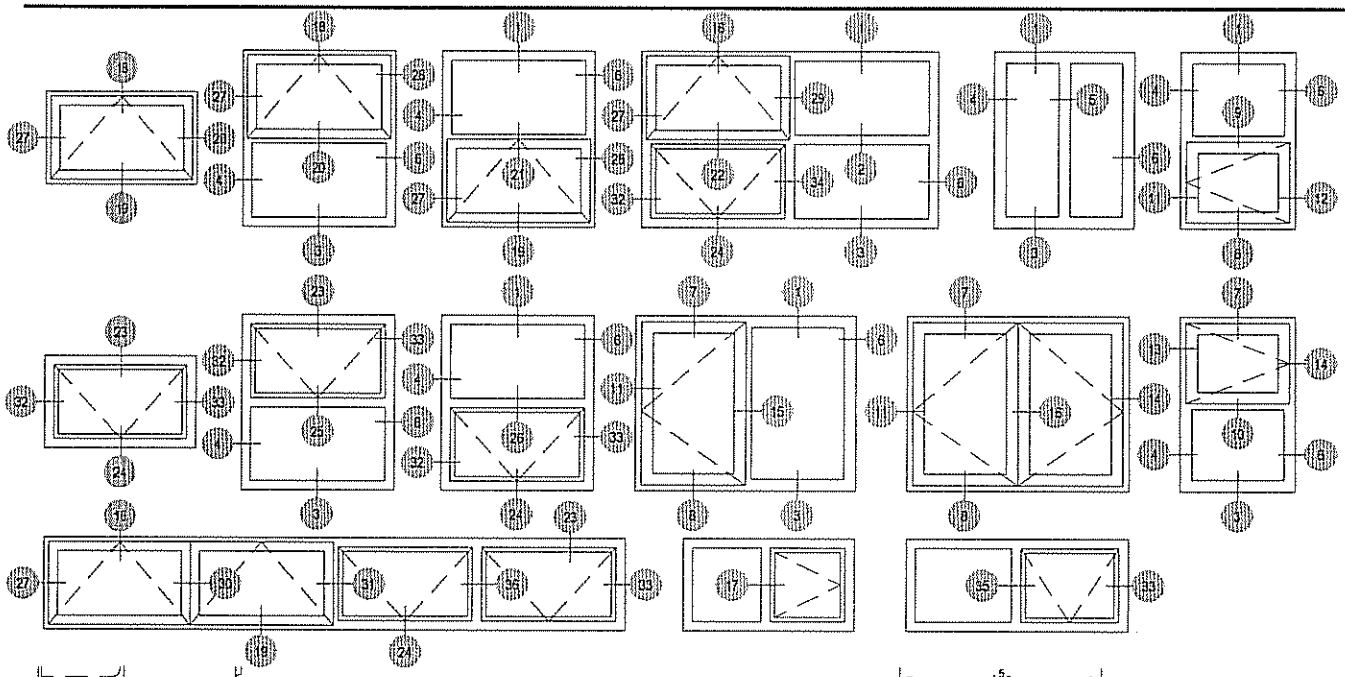

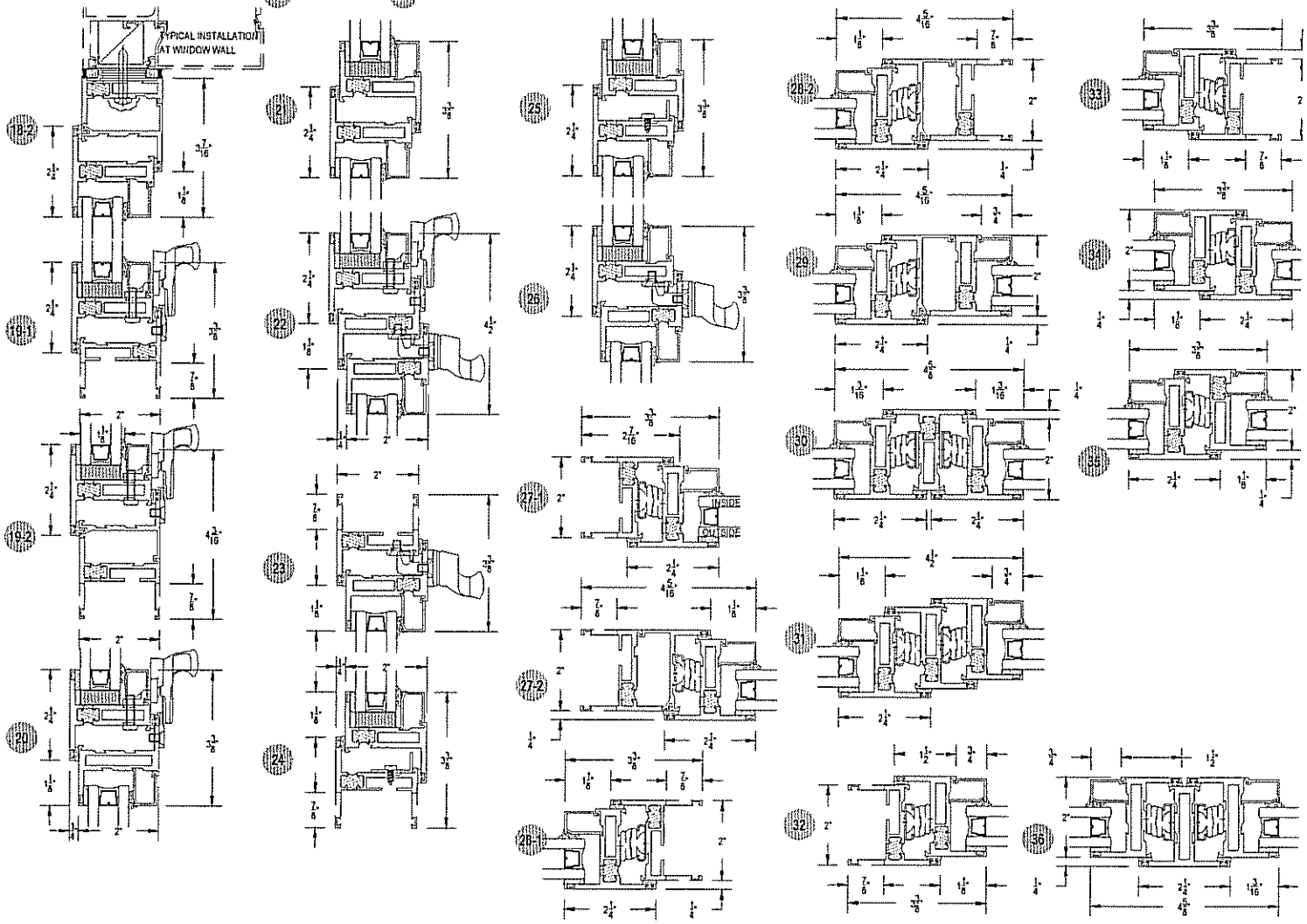

T200 Series

Description: Heavy Commercial window (Outside Set)
Function: Wiindow
Detail: Fixed, Casement, Awning, Hopper
Scale: 3" = 1'-0"

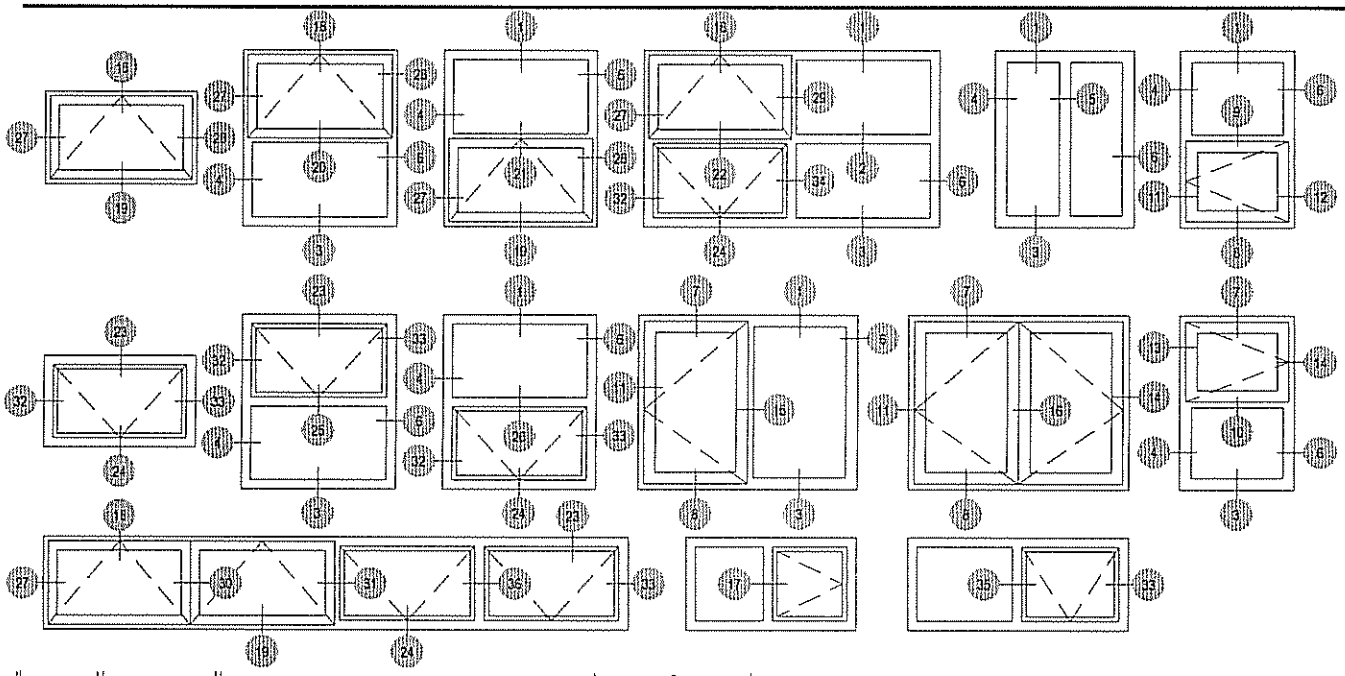

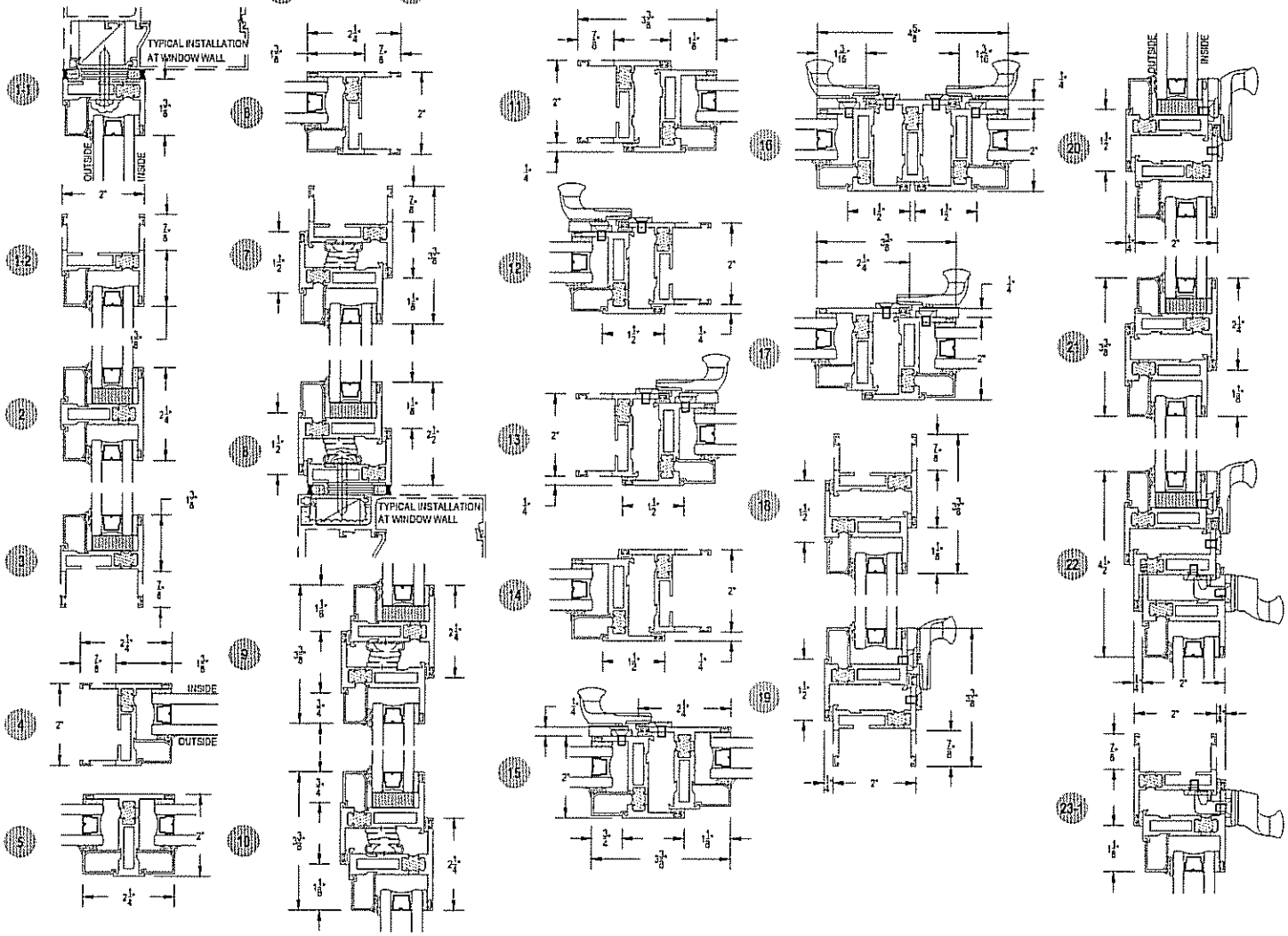

T200 Series

Description: Heavy Commercial window (Outside Set)
Function: Wiindow
Detail: Fixed, Casement, Awning, Hopper
Scale: 3" = 1'-0"

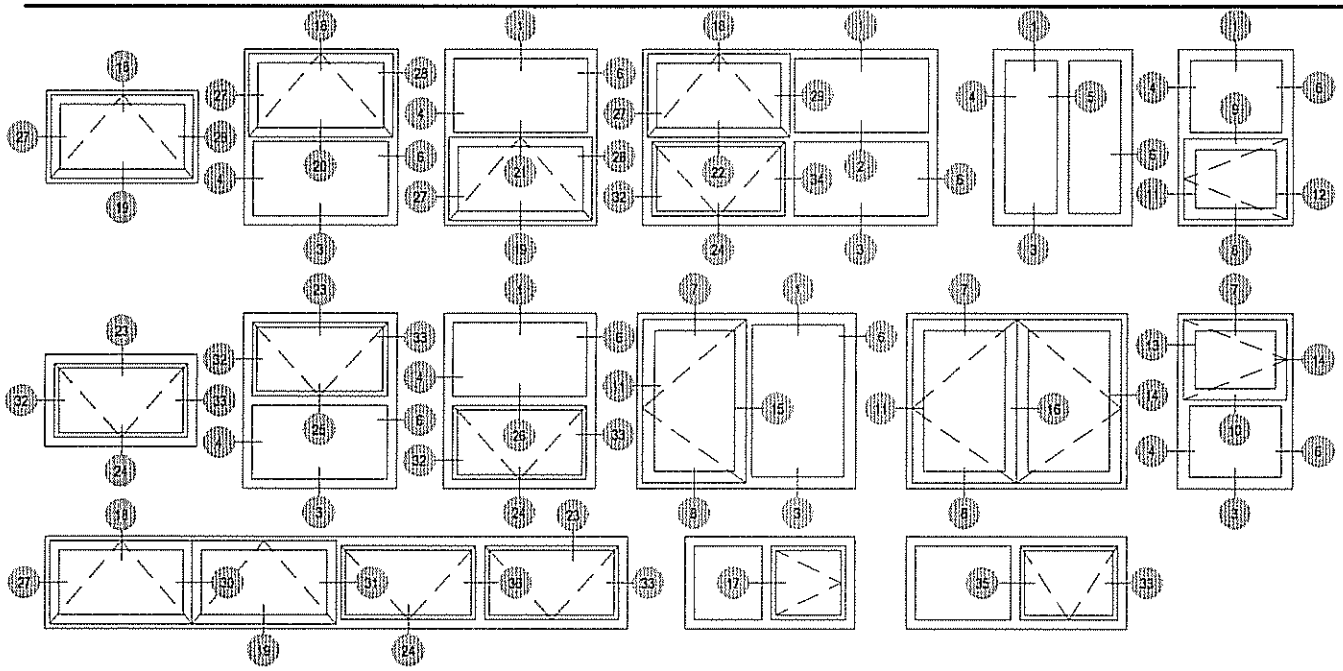

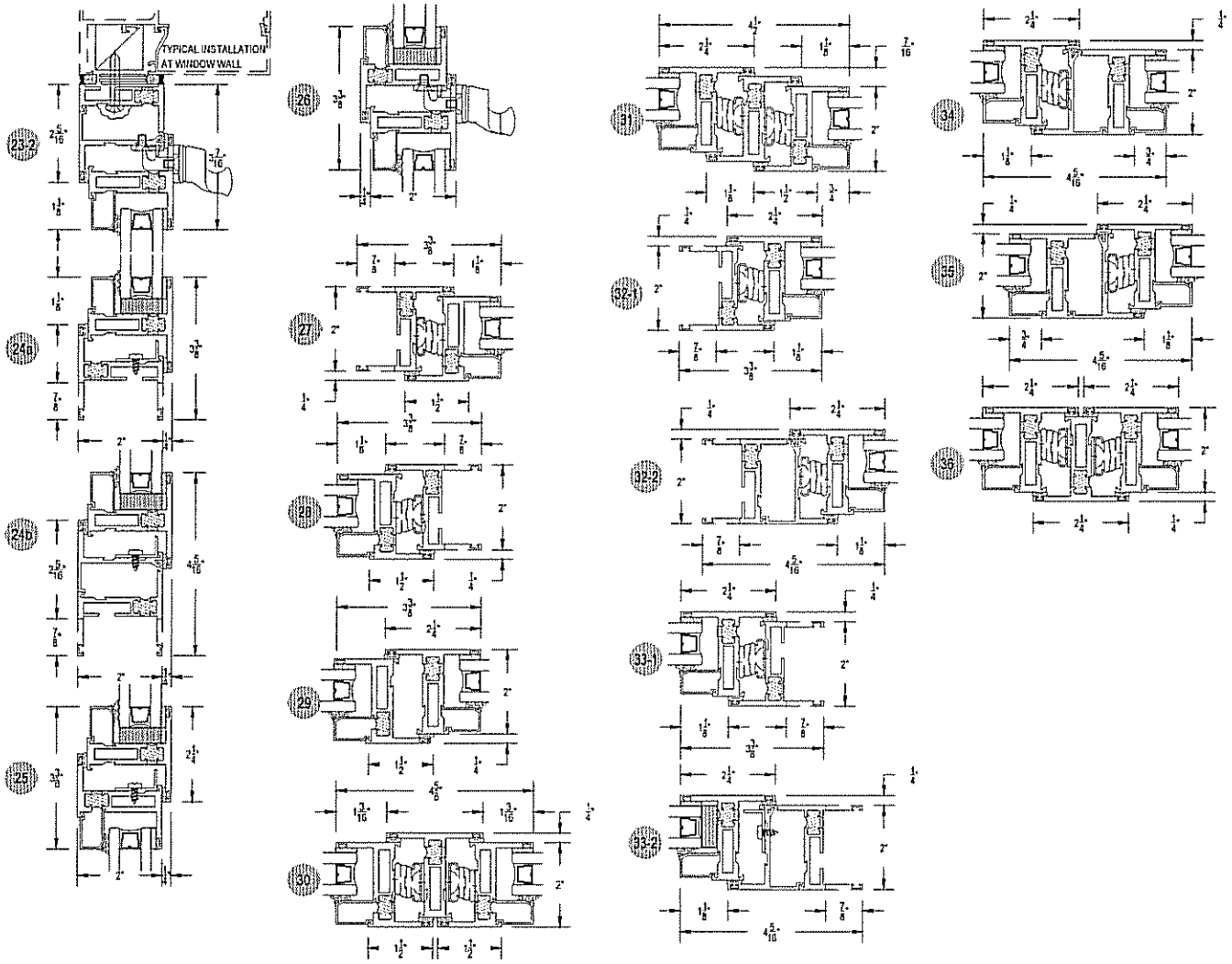

Fenestration Testing Laboratory, Inc.

10235 8th Street • Rancho Cucamonga, CA 91730 • PH. (909) 477-4343 • FAX (909) 477-4348

TESTED FOR

ARCADIA, INC.
2301 E. Vernon Ave.
Vernon, CA 90058

1.0 PURPOSE

The purpose of this report is to present the testing methods employed and the test results obtained during the performance testing of one (1) **Thermally Broken Aluminum Awning Window** described in paragraph 4.0 of this report.

2.0 TEST REFERENCES

2.1 NAFS – North American Fenestration Standard/specification for windows, doors, and skylights AAMA/WDMA/CSA 101/I.S.2/A440-08
Class AW – PG80: Size Tested 1524 x 914 mm (60 x 36 in) – Type AP

2.2 CAWM 301 - 90 Forced Entry Resistance Tests for Windows.

2.3 ASTM F 588-07 Standard Test Method for Measuring the Forced Entry Resistance of Windows

3.0 SUMMARY

The test results in paragraphs 5.0 and 6.0 indicate that the test sample described in paragraph 4.0 of this report complied with the performance requirements of the above referenced specifications.

4.0 SAMPLE SUBMITTED

SERIES:	T200 AW Awning
CONFIGURATION:	X (Single Vent Projected Out)
FRAME SIZE:	1524 mm x 914 mm (60.00" x 35.98")
SASH SIZE:	1467 mm x 857 mm (57.76" x 33.74")
GLASS:	All lites contained 1" overall insulated glass with 1/4" annealed glass on both sides.
SPACER:	All spacers were 0.5" wide aluminum desiccant filled box-type.
GLAZING:	The glass was outside drop glazed onto 0.5" x 0.125" double sided adhesive foam tape. A bead of silicone was applied 3" in both direction at each corner along the outer edge of the glazing tape. Aluminum snap-in glazing stop was applied full perimeter on the outside.
WEEPAGE:	The sill contained a 1" x 0.125" weep slot 4" from each end. The hollow bulb on the vent bottom rail was notched 1" in line with each weep.

WEATHERING: A hollow bulb vinyl was applied full perimeter of the frame facing out and full perimeter of the vent facing in.

HARDWARE: The sill contained a metal cam lock 11" from each end and at mid-span. Each lock was fastened with a pair of #10 x 3/8" PFH screws. Each lock engaged a metal strike fastened with a pair of #10 x 3/8" PFH screws to the lock rail.

The vent was supported in the frame with a 22" four bar friction hinge at the top of each stile. Each hinge was fastened with #10 x 3/8" PPH screws – four per jamb and five per stile.

CONSTRUCTION: All frame and vent corners were mitered, keyed and staked.
The thermal debridged width was 0.175" on the sash and 0.19" on the frame.

CAULKING: The frame and sash joints were all sealed.
The lock and strike fasteners were all sealed.
The screws that fastened the frame to the rough opening were all sealed.

ANCHORING: The frame was mounted in a rough opening constructed of 2" x 6" aluminum tube with #10 x 2.5" PFH screws as follows: Five per horizontal and three per vertical. The aluminum tube in turn was mounted in a 2" x 6" wooden stud frame-work with bolts.

5.0 TEST PROCEDURES AND RESULTS

5.1 All testing procedures were performed in accordance with the performance requirements of the test specifications referenced in paragraph 2.0 of this report.

5.2 **TEST RESULTS**

PARAGRAPH	TEST DESCRIPTION	MEASURED	ALLOWED
5.3.1.1	Operating Force (ASTM E 2068)		
	Breakaway Force	30 N (6.7 lbf)	Report only
	Operating Force	68.0 N (15.28 lbf)	155N (35 lbf)
5.3.1.1.3	Latching Device		
	Open and Close Latch Device	13.0 N (2.92 lbf)	100 N (22.5 lbf)
5.3.2.1	Air Infiltration (ASTM E 283)		
	300 Pa	0.15 L/s•m²	0.5 L/s•m²
	(6.2 PSF)	(0.03 CFM/Ft²)	(0.1 CFM/Ft²)
	The tested specimen meets the performance levels specified in AAMA/WDMA/CSA 101/I.S.2/A440 for air leakage resistance.		
5.3.3.2	Water Penetration (ASTM E 547 & ASTM E 331)		
	390 Pa (8.00 PSF)	No Leakage	No Leakage
	Interior screen		
5.3.6.9	Life Cycle Testing (AAMA 910) *(Paragraph numbers correspond to AAMA 910)*		
	2.1.4 – Vent Cycle Testing 1st Half	No damage	No damage
	2.1.5 – Locking Hardware Cycle 1st half	No damage	No damage
	2.1.7 – Misuse Testing	No damage	No damage
	2.1.8 - Vent Cycle Testing 2st Half	No damage	No damage
	2.1.9 – Locking Hardware Cycle 2st half	No damage	No damage
	2.1.11 - Air Infiltration (ASTM E 283)		
	300 Pa	0.5 L/s•m²	0.5 L/s•m²
	(6.2 PSF)	(0.10 CFM/Ft²)	(0.1 CFM/Ft²)
	The tested specimen exceeds the performance levels specified in AAMA/WDMA/CSA 101/I.S.2/A440 for air leakage resistance.		

5.2 **TEST RESULTS (Continued)**

PARAGRAPH	TEST DESCRIPTION	MEASURED	ALLOWED
5.3.6.9	2.1.12 - Water Penetration (ASTM E 547 & ASTM E 331)		
	390 Pa (8.00 PSF)	No Leakage	No Leakage
	580 Pa (12.0 PSF)	No Leakage	No Leakage
	Interior Screen		
5.3.4.2	Uniform Load Deflection (ASTM E 330)		
	1920 Pa (40.0 PSF) POS	1.00 mm (0.04")	8.50 mm (0.33")
	1920 Pa (40.0 PSF) NEG	2.00 mm (0.08")	8.50 mm (0.33")
5.3.4.3	Uniform Load Structural (ASTM E 330)		
	2880 Pa (60.0 PSF) POS	0.00 mm (0.00")	3.00 mm (0.12 " Set)
	2880 Pa (60.0 PSF) NEG	0.00 mm (0.00")	3.00 mm (0.12" Set)
5.3.6.4.2	Sash/Leaf Torsion Test		
	70 N (15 lbf.)	23.50 mm (0.93")	41.25 mm (1.62")
5.3.6.4.4	Sash Concentrated Load Test on Latch Rail		
	135 N (30 lbf.) Perpendicular	1.25 mm (0.05")	1.50 mm (0.06")
	135 N (30 lbf.) Parallel	0.75 mm (0.03")	1.50 mm (0.06")

5.3 **OPTIONAL PERFORMANCE GRADES**
TEST RESULTS

PARAGRAPH	TEST DESCRIPTION	MEASURED	ALLOWED
5.3.3.2	Water Penetration (ASTM E 547 & ASTM E 331) (Prior to life cycle and after)		
	580 Pa (12.00 PSF)	No Leakage	No Leakage
	Interior Screen		
5.3.4.2	Uniform Load Deflection (ASTM E 330)		
	3840 Pa (80.0 PSF) POS	1.75 mm (0.07")	8.50 mm (0.33")
	3840 Pa (80.0 PSF) NEG	4.00 mm (0.16")	8.50 mm (0.33")
5.3.4.3	Uniform Load Structural (ASTM E 330)		
	5760 Pa (120.0 PSF) POS	0.00 mm (0.00")	3.00 mm (0.12")
	5760 Pa (120.0 PSF) NEG	0.00 mm (0.00")	3.00 mm (0.12")

6.0 5.3.5 **ASTM F 588 Forced Entry Resistance Test Results For Windows**
1.2.2 Type "B" Operable Window Assemblies

Table A1.1 Grade 40

	TEST	RESULTS	ALLOWED
A2.5.1	A2.1	Passed	No Entry
A2.5.2	B1	Passed	No Entry
A2.5.3	B2	Passed	No Entry
A2.5.4	B3	Passed	No Entry
A2.5.1	A2.2	Passed	No Entry
A2.5.1	A2.3	Passed	No Entry

5.3.5 **CAWM 301 - 90 Forced Entry Resistance Tests for Windows.**

2.4.2 Type "II" Window Assemblies

	TEST	RESULTS	DESCRIPTION
5.2.1		Passed	No Entry
5.2.2	A	Passed	No Entry
5.2.3	B	Passed	No Entry
5.2.4	C	Passed	No Entry
5.2.5	E	Passed	No Entry

For a complete description of the tested sample refer to the attached cross section and die drawings.

Assembly and die drawings of frame members are on file and have been compared to the sample submitted. Test sample sections, drawings, and a copy of this report will be retained at the test laboratory for four years.

This test report may not be modified in any way without the written consent of Fenestration Testing Laboratory.

The preceding test results were obtained by using the applicable ASTM, AAMA, and CAWM test methods. This report does not constitute certification of this product. An approved administrator/validator can only grant certification.

Testing Completed: December 17, 2009
Report Completed: December 18, 2009

Pete Cruz
Test Engineer

Jim Cruz
Testing Manager

BILL OF MATERIAL
T-200AW SERIES AWNING WINDOW

QTY:	PART #:	FAB #:	DESCRIPTION:	SIZE/FORMULA	VENDOR
0	WTH-01	WTH-01	FRAME HEAD	W	
0	WTH-01	WTH-01	FRAME SILL	W (STD STRIKES 12" & 1 @ C/L)	
0	WTH-01	WTH-01	FRAME JAMBS	H	
0	WTZ-02-AW	WTZ-02AW	SASH TOP RAIL	W - 2 1/4"	
0	WTZ-02-AW	WTZ-02AW	SASH BOTTOM RAIL	W- 2 1/4" (STD HOLS 10 7/8" & 1 @ C/L)	
0	WTZ-02-AW	WTZ-02AW	SASH JAMB RAILS	H - 2 1/4"	
0	WWB-03		GLAZING BEAD	W - 6 7/8"	
0	WWB-03		GLAZING BEAD	H - 7 3/8"	
0	WWM-01		CORNER KEYS Frame	1 1/8"	
0	WWM-01		CORNER KEYS Sash	1"	
0	96061-5		WEATHER-STRIP	W	VIP RUBBER
0	96061-5		WEATHER-STRIP	H	VIP RUBBER
0	V884		1/8" X 1/2" GLAZING TAPE	W	NORTON
0	V884		1/8" X 1/2" GLAZING TAPE	H	NORTON
0	E260		E.P.D.M GLAZING WEDGE	W	VIP RUBBER
0	E260		E.P.D.M GLAZING WEDGE	H	VIP RUBBER
0			PAIRS BRONZE CRAFT STERLING HINGES (SEE CHART BELOW FOR SIZE)		
0		162-001	BRONZE CRAFT R/H CAM HANDLE		
0		262-055	BRONZE CRAFT HANDLE STRIKE		
0			#10Bx3/8 PPH SS HINGE SCREWS		
0			#10Bx3/8" PFH SS HARDWARE SCREWS		

HINGE INFORMATION

PART#	SIZE	SASH HEIGHT MAX.	
881-110-8046	10"	30"	
881-112-8046	16"	44"	
881-114-8046	22"	62"	Used on Test
881-116-8046	26"	79"	

INFORMATION

* GLASS WIDTH	W - 6 3/8"
* GLASS HEIGHT	H - 8 3/8"

NOTE: * 1" (1/4" X 1/2" X 1/4") GLASS CLEAR ANNEALED

FENESTRATION TESTING LAB
REPORT NO A09AP-116
DATE 12/21/09

Prepared by: Rudy de Leon 12/21/2009

CUSTOMER: ARCADIA WINDOW LINE	JOB NAME: AW TESTING	
PRODUCT: T-200AW	FINISH: ANY	
DRAWN BY: RUDY DE LEON	DATE: 12/10/09	SHEET: 3 OF 3

ARCADIA, INC.
2801 E. Vernon Ave. Vernon, CA 90058
Tel. (323) 771-0810 Fax (323) 771-0020

1 REVISED 12-21-09

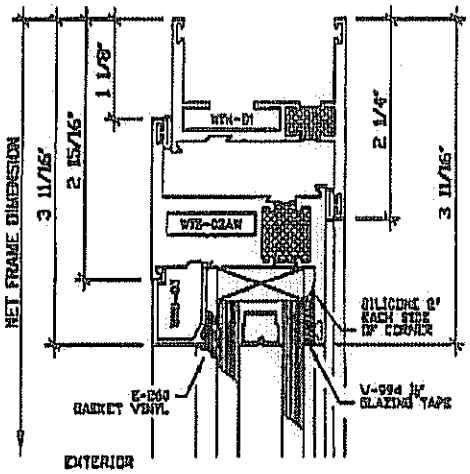

1 HEAD AWNING DETAIL

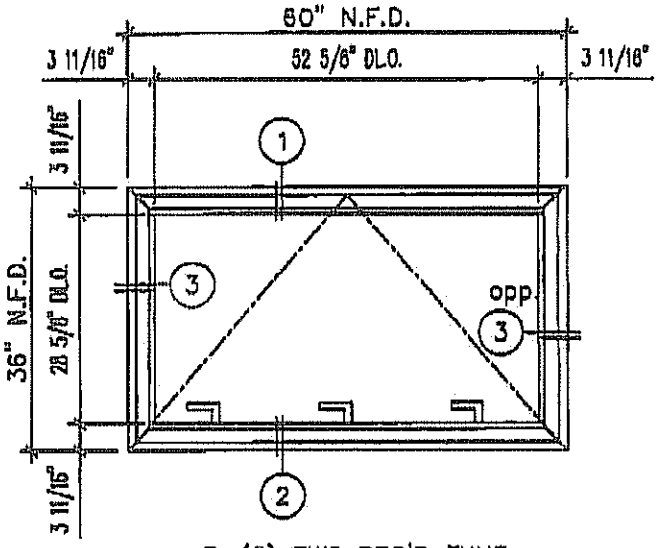

W5 (2) TWO REQ'D THUS
SCALE: 1/2" = 1'

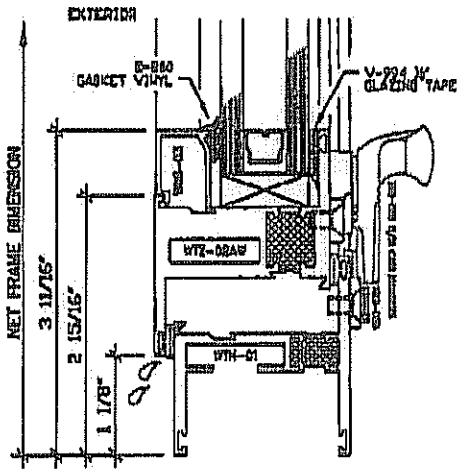

2 SILL AWNING DETAIL

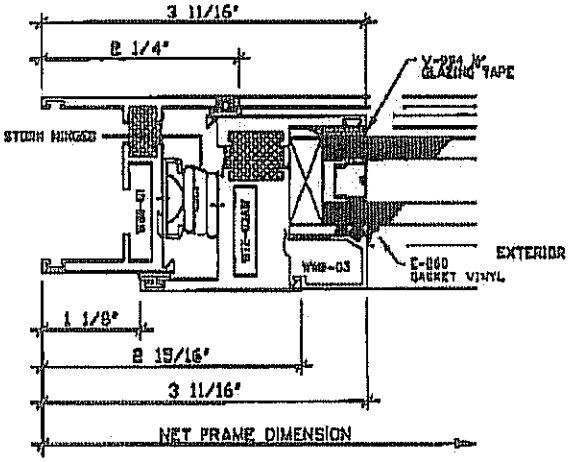

3 JAMB AWNING DETAIL

FENESTRATION TESTING LAB
REPORT NO. A09AP-116
DATE 12/21/09

CUSTOMERS REVIEW:

APPROVED FOR FABRICATION, NO EXCEPTIONS TAKEN. BY: _____	DATE : _____
APPROVED FOR FABRICATION, AS NOTED. BY: _____	DATE : _____
PLEASE REVISE & RESUBMIT, DO NOT FABRICATE. BY: _____	DATE : _____

SCALE: 6" = 1'

FITS WITH PART#

A09AP-116

FENESTRATION TESTING LAB
TEST NO. A09AP-116
DATE 12/21/09

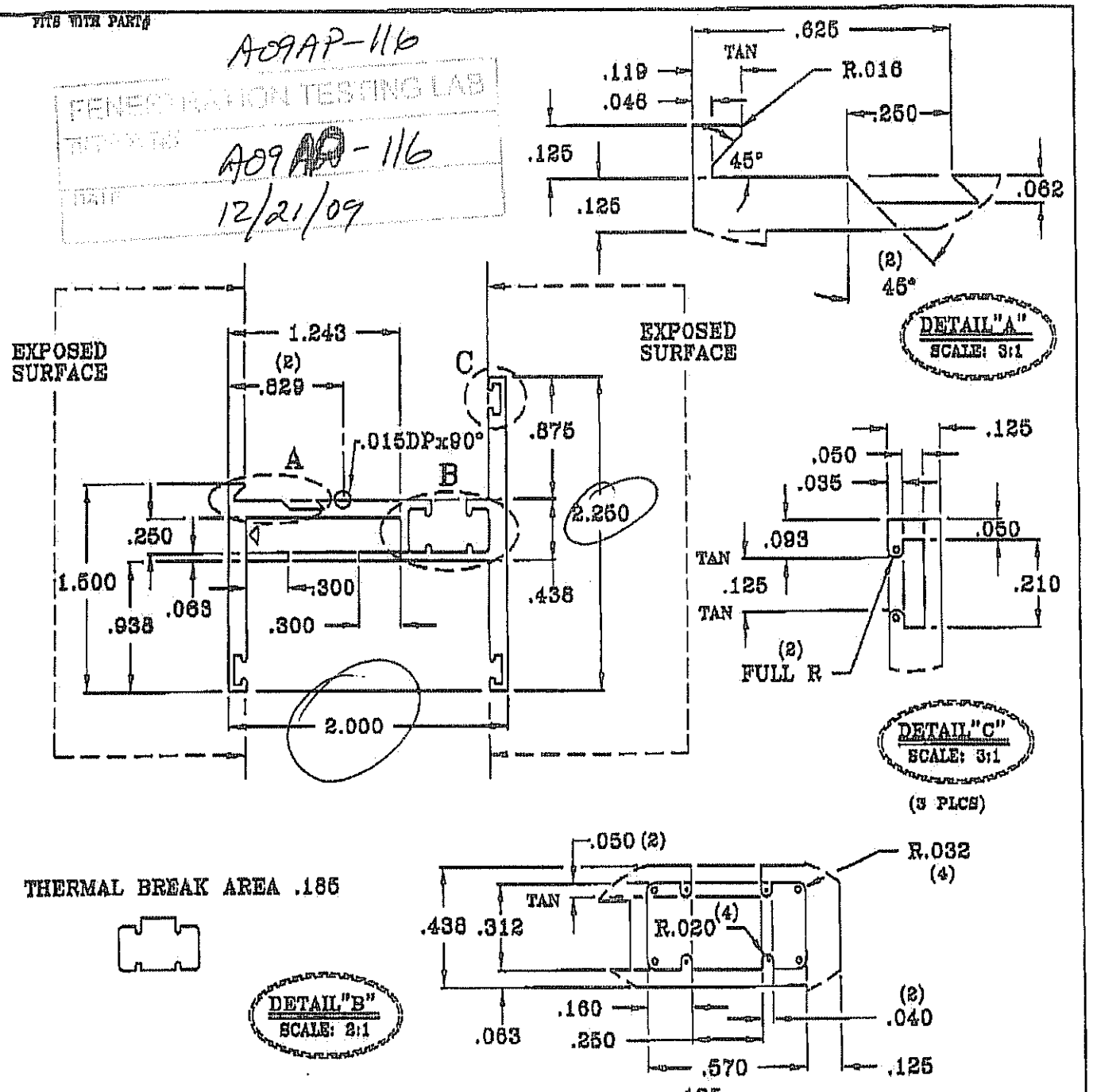

▷.010 R. X .010DEEP I.D. MARK

NOTE: .125 TYP. WALL EXCEPT AS NOTED
UNMARKED CORNERS .010 R.

CONTAINER 6	DIE RING 6	SPACER RING 2					
AREA .671	PORTS 2	BKR 600157					
WT/FT .805	W/P POCKET	BOLSTER 2-8					
PERI. 15.327	ARC24552	DIE SIZE 10x2					
DWN. BY TAS	DATE 6/26/00	MAT'L. 6063-T5					
CHKD. BY	DATE	STANDARD TOLERANCES UNLESS OTHERWISE NOTED	LET.	REVISION		BY	DATE

SIERRA ALUMINUM COMPANY
8346 Fleetwood Drive
Riverside, California 92509
(909)781-7800 FAX (909)781-7854

CUSTOMER: ARCADIA, INC.

PART NAME: EQUAL LEG FRAME (LONG) THERMAL

SCALE: 1:1 — PART NO. WTH-01

DIE NO. 600157

PENETRATION TESTING LAB
REPORT NO A09AP-116
DATE 12/21/09

Page 4 of 5

CUST. ARCADIA | PART NAME | PART NUMBER W12-02AW

REV | REVISIONS | BY | DATE

* SURFACE BLEMISHES MAY APPEAR ON THESE SURFACES

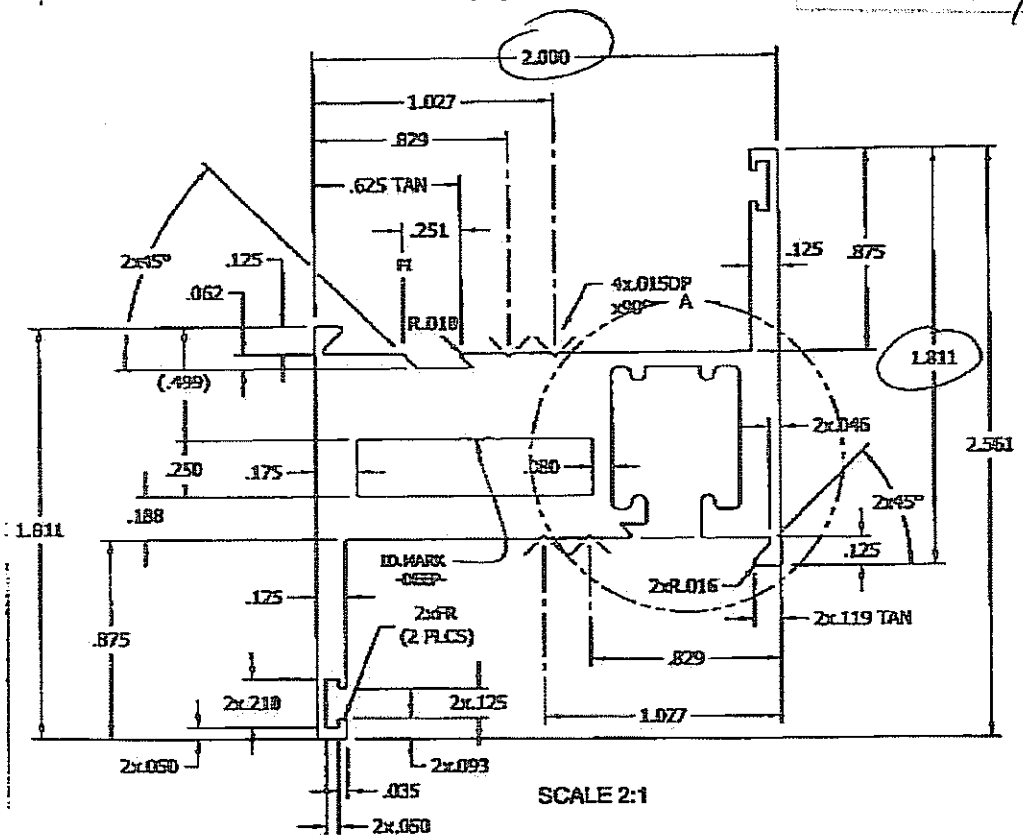

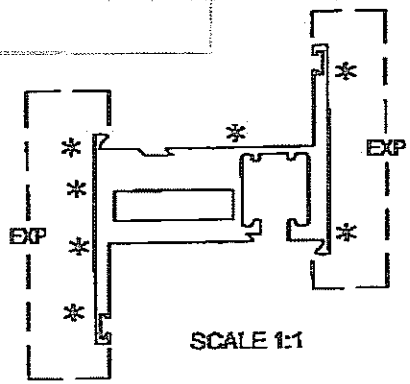

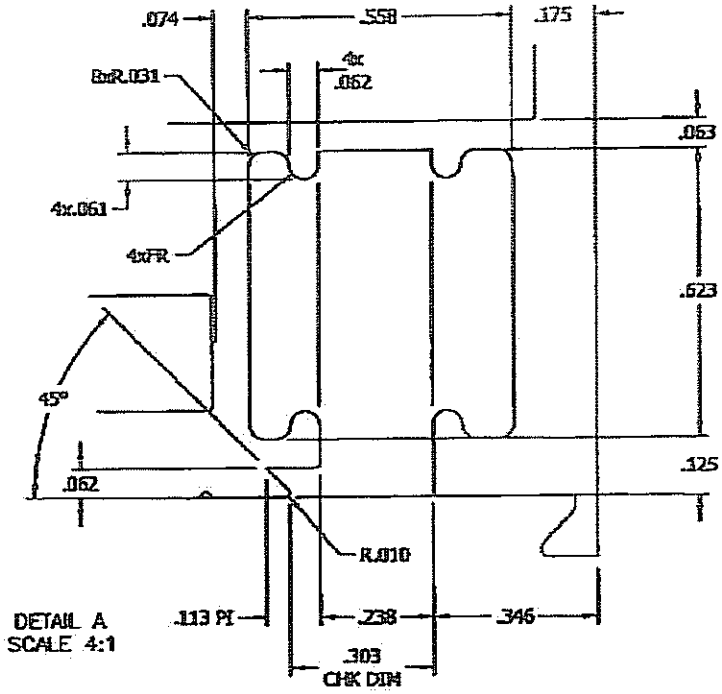

UNMARKED WALLS: NONE | UNMARKED CORNERS: R.010 | UNMARKED FILLETS: R.010

UNLESS OTHERWISE SPECIFIED, STANDARD ALUMINUM ASSOCIATION TOLERANCES APPLY • FRONTIER ID. MARK: TWO .010 R x .100 APART

AREA 1.194	PRESS 4	DWN CD	Frontier Aluminum Corp. 2480 Railroad St.Corona, Ca Ph[951] 735-1770 Fax 735-1805 http://www.frontier-aluminum.com	
WT/FT 1.433	PORTS 10x5-1H	DATE 12.21.2009		
PERI. 15.599	W/P HOLLOW	15096-1 ACX		
FACTOR 11	BKR. HOLLOW	CLASS HOLLOW		
C.C.D. 3.241	BOL	13.078	ALOY & TEMPER 6063-T6	DIE NO. 9894 REV. N/C
AW:6531/95				

ZW80W12.21.09.DWG DATE: 12/21/2009 2:05 AM

FITS WITH PART#

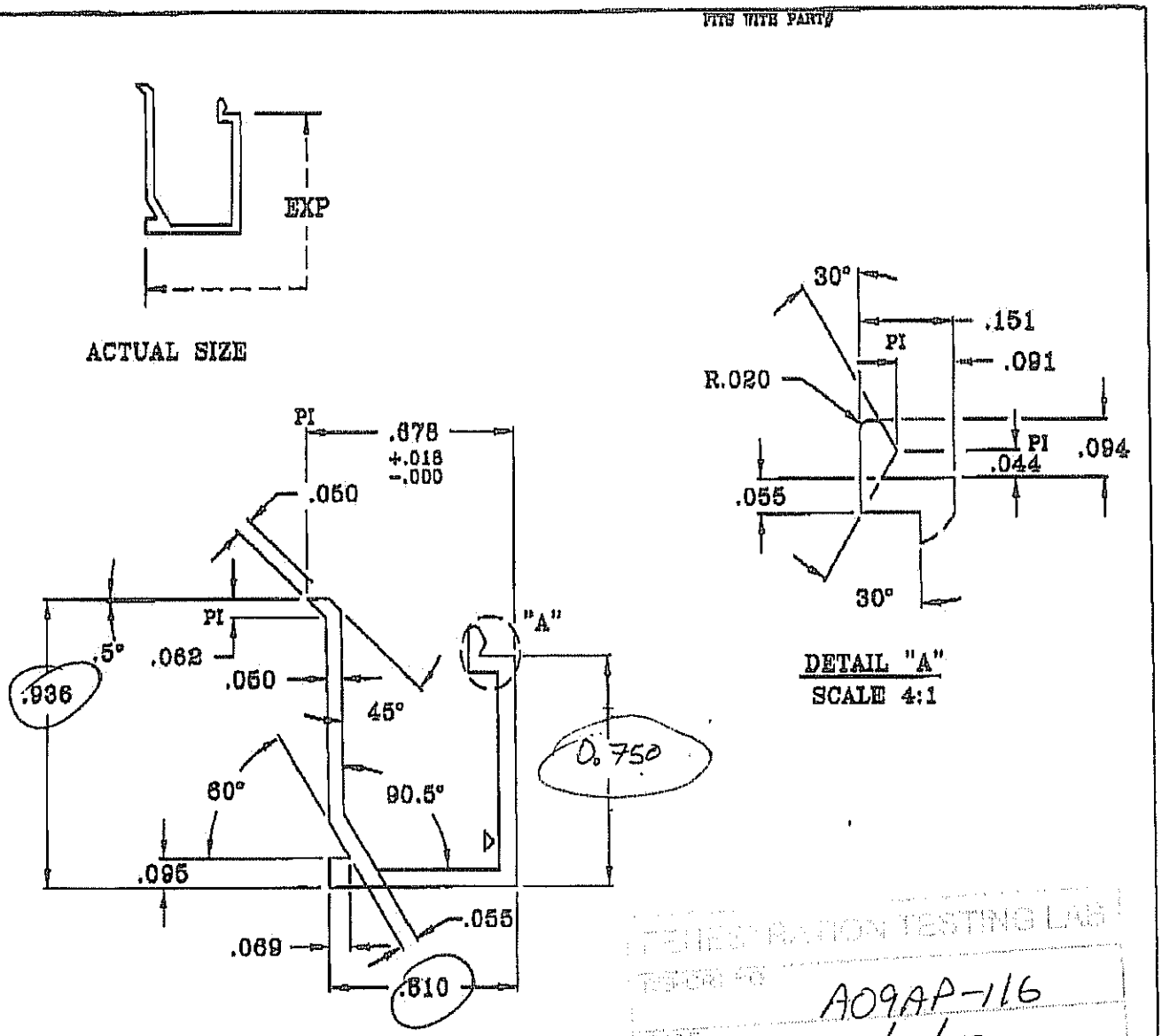

FEDERATION TESTING LAB
TESTER NO. A09AP-116
DATE 12/21/09

▷.010 R. X .010DEEPI.D. MARK

NOTE: .055 TYP. WALL EXCEPT AS NOTED
UNMARKED CORNERS .010 R.

CONTAINER 7/8	DIE RING 5	SPACER RING 2					
AREA .132	PORTS 8	BKR 912070					
WT/FT .158	W/P 912070	BOLSTER 8-2					
PERI. 4.935	ARC22223	DIE SIZE 9x1					
DWN. BY IAZ DATE 7/13/99	MAT'L. 6063-T5						
CHKD. BY DATE	STANDARD TOLERANCES UNLESS OTHERWISE NOTED		LET.	REVISION		BY	DATE

SIERRA ALUMINUM COMPANY
2645 Fleetwood Drive
Riverside, California 92509
(909)781-7800 FAX (909)781-7884

CUSTOMER: ARCADIA, INC

PART NAME: GLAZING BEAD FOR 1" GLASS

SCALE 2:1

PART NO. WWB-03

DIE NO. 912070

AW Test: Arcadia Inc

Procedure

#1: Cycle Locking Hardware Separate from Sash Cycle Test

#2: Maintenance to be performed every 250 cycles

Maintenance as follows

a) Cam and locking devices: Lube with a light oil such as 3 in 1 or equivalent. A graphite type lube may also be used.
b) Hinges: Clean if necessary and lube with a light oil such as 3 in 1 or equivalent. Do not use a silicone based lube.
c) Check and reinstall any weather strip that may have pulled out.
d) Check and tighten any loose hardware fasteners.

Don West
Arcadia Inc.
12-09-09

FENESTRATION TESTING LAB
REPORT NO. A09C-114, A09AP-115
A09AP-116
DATE 12/21/09

Fenestration Testing Laboratory, Inc.

10235 8th Street • Rancho Cucamonga, CA 91730 • PH. (909) 477-4343 • FAX (909) 477-4348

TESTED FOR
ARCADIA, INC.
2301 E. Vernon Ave.
Vernon, CA 90058

1.0 PURPOSE

The purpose of this report is to present the testing methods employed and the test results obtained during the performance testing of one **(1) Thermally Broken Aluminum Casement Window** described in paragraph 4.0 of this report.

2.0 TEST REFERENCES

2.1 NAFS – North American Fenestration Standard/specification for windows, doors, and skylights AAMA/WDMA/CSA 101/I.S.2/A440-08
Class AW – PG80: Size Tested 930 x 1524 mm (37 x 60 in) – Type C

2.2 CAWM 301 - 90 Forced Entry Resistance Tests for Windows.

2.3 ASTM F 588-07 Standard Test Method for Measuring the Forced Entry Resistance of Windows

2.4 AAMA 910 – Voluntary "Life Cycle" Specification and Test Method for Architectural Grade Windows and Sliding Glass Doors

3.0 SUMMARY

The test results in paragraphs 5.0 and 6.0 indicate that the test sample described in paragraph 4.0 of this report complied with the performance requirements of the above referenced specifications.

4.0 SAMPLE SUBMITTED

SERIES:	T-200 AW Casement (Inside Glazed)
CONFIGURATION:	X (Single Vent)
FRAME SIZE:	930 mm x 1524 mm (36.61" x 60.00")
SASH SIZE:	870 mm x 1467 mm (34.25" x 57.76")
GLASS:	All lites contained 1" overall insulated glass with 1/4" annealed glass on both sides.
SPACER:	All spacers were 0.5" wide aluminum desiccant filled box-type.
GLAZING:	The glass was inside drop glazed onto a 1/8" x 0.50" double sided adhesive foam tape. A heal bead of silicone was applied 8" in each direction from each corner along the edge of the glazing tape.
WEEPAGE:	The sill outside 1/8" high leg contained a 1" wide notch 4" from each end. The bulb vinyl on the vent was notched 1" where it made contact with the sill weep.

WEATHERING: A hollow bulb vinyl was applied full perimeter of the frame facing out and full perimeter of the vent facing in.

HARDWARE: The frame lock jamb contained a metal cam lock 11" from each end and at mid-span. Each lock was fastened with a pair of #10 x 3/8" PFH screws. Each lock engaged a metal strike fastened with a pair of #10 x 3/8" PFH screws to the lock stile.
The vent was supported with a 16.75" four bar friction hinge at the top and bottom rails. The hinge was fastened with #10 x 3/8" PPH screws – three screws to the frame and four to the sash.

CONSTRUCTION: All frame and vent corners were mitered, keyed and staked. The vent corners keys were fastened to their corresponding rail and stiles with a pair of #10 x 3/8" PFH screws. The thermal debridged width was 0.175" on the sash and 0.19" on the frame.

CAULKING: The frame and sash joints were all sealed.
The lock and strike fasteners were all sealed.
The screws that fastened the frame to the rough opening were all sealed.

ANCHORING: The frame was mounted in a rough opening constructed of 2" x 6" aluminum tube with #10 x 2.5" PFH screws as follows: Five per vertical and three per horizontal. The aluminum tube in turn was mounted in a 2" x 6" wooden stud frame-work with bolts.

5.0 TEST PROCEDURES AND RESULTS

5.1 All testing procedures were performed in accordance with the performance requirements of the test specifications referenced in paragraph 2.0 of this report.

5.2 **TEST RESULTS**

PARAGRAPH	TEST DESCRIPTION	MEASURED	ALLOWED
5.3.1.1	Operating Force (ASTM E 2068)		
	Breakaway Force	31 N (7.0 lbf)	Report only
	Operating Force	26 N (5.8 lbf)	135N (30 lbf)
5.3.1.1.3	Latching Device		
	Open and Close Latch Device	49 N (11.0 lbf)	100 N (22.5 lbf)
5.3.2.1	Air Infiltration (ASTM E 283)		
	300 Pa	0.2 L/s•m²	0.5 L/s•m²
	(6.2 PSF)	(0.04 CFM/Ft²)	(0.1 CFM/Ft²)
	The tested specimen exceeds the performance levels specified in AAMA/WDMA/CSA 101/I.S.2/A440 for air leakage resistance.		
5.3.3.2	Water Penetration (ASTM E 547 & ASTM E 331)		
	390 Pa (8.00 PSF)	No Leakage	No Leakage
	Interior screen		
5.3.6.9	Life Cycle Testing (AAMA 910) *(Paragraph numbers correspond to AAMA 910)*		
	2.1.4 – Vent Cycle Testing 1st Half	No damage	No damage
	2.1.5 – Locking Hardware Cycle 1st half	No damage	No damage
	2.1.7 – Misuse Testing	No damage	No damage
	2.1.8 - Vent Cycle Testing 2st Half	No damage	No damage
	2.1.9 – Locking Hardware Cycle 2st half	No damage	No damage
	2.1.11 - Air Infiltration (ASTM E 283)		
	300 Pa	0.4 L/s•m²	0.5 L/s•m²
	(6.2 PSF)	(0.08 CFM/Ft²)	(0.1 CFM/Ft²)
	The tested specimen exceeds the performance levels specified in AAMA/WDMA/CSA 101/I.S.2/A440 for air leakage resistance.		

5.2 TEST RESULTS (Continued)

PARAGRAPH	TEST DESCRIPTION	MEASURED	ALLOWED
5.3.6.9	2.1.12 - Water Penetration (ASTM E 547 & ASTM E 331)		
	390 Pa (8.00 PSF) Interior Screen	No Leakage	No Leakage
5.3.4.2	Uniform Load Deflection (ASTM E 330)		
	1920 Pa (40.0 PSF) POS	1.50 mm (0.06")	8.50 mm (0.33")
	1920 Pa (40.0 PSF) NEG	0.50 mm (0.02")	8.50 mm (0.33")
5.3.4.3	Uniform Load Structural (ASTM E 330)		
	2880 Pa (60.0 PSF) POS	0.00 mm (0.00")	3.00 mm (0.12 " Set)
	2880 Pa (60.0 PSF) NEG	0.00 mm (0.00")	3.00 mm (0.12" Set)
5.3.6.4.2	Sash/Leaf Torsion Test		
	90 N (20 lbf.)	38.00 mm (1.50")	66.25 mm (2.61")
5.3.6.4.3	Sash vertical deflection test		
	270 N (60 lbf.)	1.50 mm (0.06")	17.50 mm (0.69")
5.3.6.6.2	Distributed Load Test (Opening direction only due to friction hinges)		
	300 Pa (6.2 psf)	No Damage	No Damage

5.3 OPTIONAL PERFORMANCE GRADES
TEST RESULTS

PARAGRAPH	TEST DESCRIPTION	MEASURED	ALLOWED
5.3.3.2	Water Penetration (ASTM E 547 & ASTM E 331) (Prior to life cycle and after)		
	580 Pa (12.00 PSF) Interior Screen	No Leakage	No Leakage
5.3.4.2	Uniform Load Deflection (ASTM E 330)		
	3840 Pa (80.0 PSF) POS	4.00 mm (0.16")	8.50 mm (0.33")
	3840 Pa (80.0 PSF) NEG	2.75 mm (0.11")	8.50 mm (0.33")
5.3.4.3	Uniform Load Structural (ASTM E 330)		
	5760 Pa (120.0 PSF) POS	0.00 mm (0.00")	3.00 mm (0.12")
	5760 Pa (120.0 PSF) NEG	0.00 mm (0.00")	3.00 mm (0.12")

6.0 5.3.5 ASTM F 588 Forced Entry Resistance Test Results For Windows
1.2.2 Type "B" Operable Window Assemblies

Table A1.1 Grade 40

	TEST	RESULTS	ALLOWED
A2.5.1	A2.1	Passed	No Entry
A2.5.2	B1	Passed	No Entry
A2.5.3	B2	Passed	No Entry
A2.5.4	B3	Passed	No Entry
A2.5.1	A2.2	Passed	No Entry
A2.5.1	A2.3	Passed	No Entry

5.3.5 **CAWM 301 - 90 Forced Entry Resistance Tests for Windows.**
2.4.2 Type "II" Window Assemblies

	TEST	RESULTS	DESCRIPTION
5.2.1		Passed	No Entry
5.2.2	A	Passed	No Entry
5.2.3	B	Passed	No Entry
5.2.4	C	Passed	No Entry
5.2.5	E	Passed	No Entry

For a complete description of the tested sample refer to the attached five (5) pages consisting of the bill of materials, cross section drawings, and individual die drawings.

Cross section drawings and die drawings of frame members are on file and have been compared to the sample submitted. Test sample sections, drawings and a copy of this report will be retained at the test laboratory for four years.

This test report may not be modified in any way without the written consent of Fenestration Testing Laboratory. The preceding test results relate only to the tested specimen and were obtained by using the applicable ASTM and CAWM test methods. This report does not constitute certification of this product. Certification can only be granted by an approved administrator and/or validator.

Testing Completed: December 23, 2009
Report Completed: December 28, 2009

Pete Cruz
Test Engineer

Jim Cruz
Testing Manager

BILL OF MATERIAL

T-200AW SERIES Casement Window

2

QTY:	PART #:	FAB #:	DESCRIPTION:	SIZE/FORMULA	VENDOR
2	WTH-01	WTH-01	FRAME HEAD	W	
2	WTH-01	WTH-01	FRAME SILL	W	
2	WTH-01	WTH-01	FRAME JAMB	H	
2	WTH-01	WTH-01	FRAME JAMB	H (STD STRIKES 12" & 1 @ C/L)	
2	WTT-02-AW	WTT-02AW	SASH TOP RAIL	W - 2 1/4"	
2	WTT-02-AW	WTT-02AW	SASH BOTTOM RAIL	W- 2 1/4"	
2	WTT-02-AW	WTT-02AW	SASH JAMB RAIL	H - 2 1/4"	
4	WTT-02-AW	WTT-02AW	SASH JAMB RAIL	H- 2 1/4" (STD HDLS 10 7/8" & 1 @ C/L)	
4	WWB-03		GLAZING BEAD	W - 6 7/8"	
4	WWB-03		GLAZING BEAD	H - 7 3/8"	
8	WWM-01		CORNER KEYS Frame	1 1/8"	
8	WWM-01		CORNER KEYS Sash	1"	
8	S6061-5		WEATHER-STRIP	W	VIP RUBBER
8	S6061-5		WEATHER-STRIP	H	VIP RUBBER
4	V894		1/8" X 1/2" GLAZING TAPE	W	NORTON
4	V894		1/8" X 1/2" GLAZING TAPE	H	NORTON
4	E260		E.P.D.M GLAZING WEDGE	W	VIP RUBBER
4	E260		E.P.D.M GLAZING WEDGE	H	VIP RUBBER
2			PAIRS BRONZE CRAFT STERLING HINGES (SEE CHART BELOW FOR SIZE)		
6		162-001	BRONZE CRAFT R/H CAM HANDLE		
6		282-055	BRONZE CRAFT HANDLE STRIKE		
12			#10Bx3/8 PPH SS HINGE SCREWS		
6			#10Bx3/8" PFH SS HARDWARE SCREWS		
			HINGE INFORMATION		
	PART#	SIZE	SASH HEIGHT MAX.		
1pr	#331		Truth Egress Hinge		Truth Hardware
			INFORMATION		
			* GLASS WIDTH	W - 6 3/8"	
			* GLASS HEIGHT	H - 6 3/8"	

NOTE: * 1" (1/4" X 1/2" X 1/4") GLASS CLEAR ANNEALED

FENESTRATION TESTING LAB
REPORT NO: A09C-117
DATE: 12-29-09

Prepared by: Rudy de Leon 12/28/2009

CUSTOMER: ARCADIA WINDOW LINE	JOB NAME: AW TESTING
PRODUCT: T-200AW	FINISH: ANY
DRAWN BY: RUDY DE LEON	DATE: 12/28/09 SHEET: ADDED

arcadia ARCADIA, INC. 2301 E. Vernon Ave. Vernon, CA 90058 Tel. (323) 771-0810 Fax (323) 771-5820

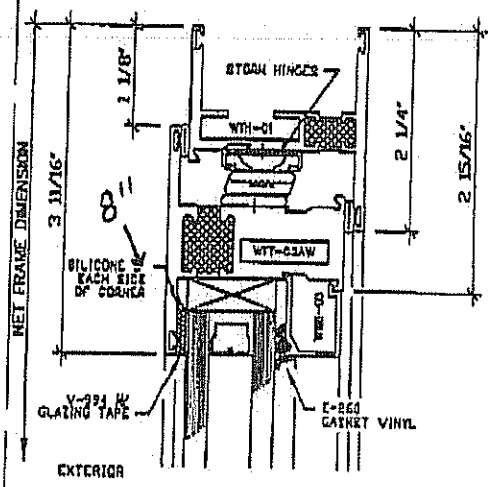

1 HEAD CASEMENT DETAIL

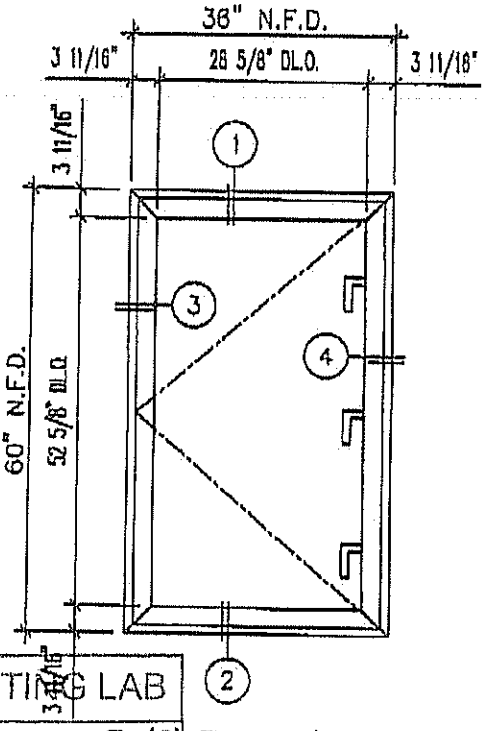

FENESTRATION TESTING LAB

REPORT NO: A09C-117 (W4) (2) TWO REQ'D THUS

DATE: 12/29/09 SCALE: 1/2" = 1'

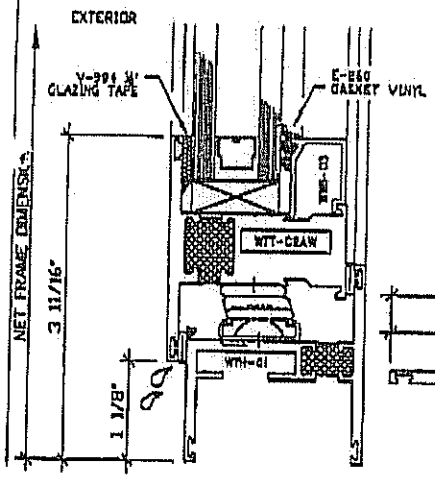

2 SILL CASEMENT DETAIL

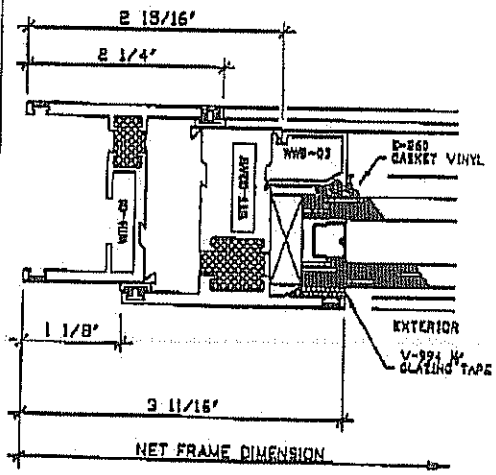

3 JAMB CASEMENT DETAIL

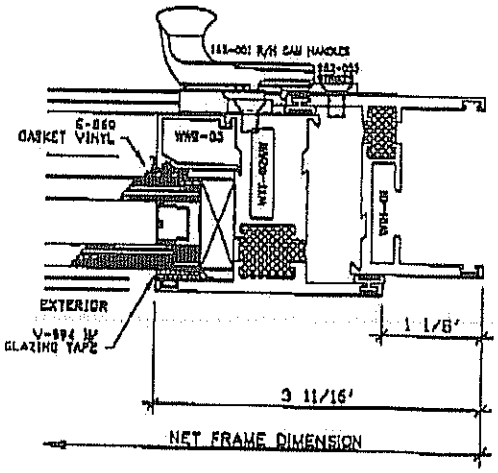

4 JAMB CASEMENT DETAIL

CUSTOMERS REVIEW:

APPROVED FOR FABRICATION, NO EXCEPTIONS TAKEN. BY: _____ DATE: _____
APPROVED FOR FABRICATION, AS NOTED. BY: _____ DATE: _____
PLEASE REVISE & RESUBMIT, DO NOT FABRICATE. BY: _____ DATE: _____

SCALE: 6" = 1'

FENESTRATION TESTING LAB

REPORT NO: ADPC-117

DATE: 12/29/09

CUST.	ARCADIA	PART NAME:	
		PART NUMBER:	WIT-02A7

REV	REVISIONS	BY	DATE

* SURFACE BLEMISHES MAY APPEAR ON THESE SURFACES

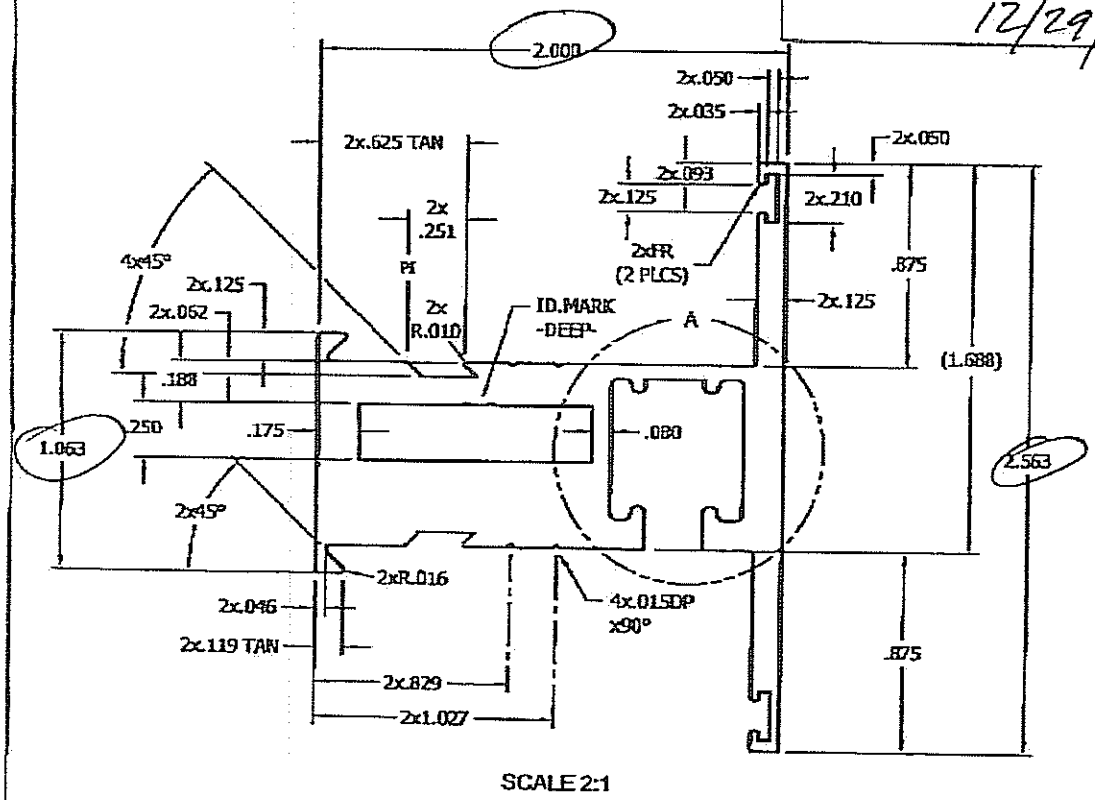

SCALE 2:1

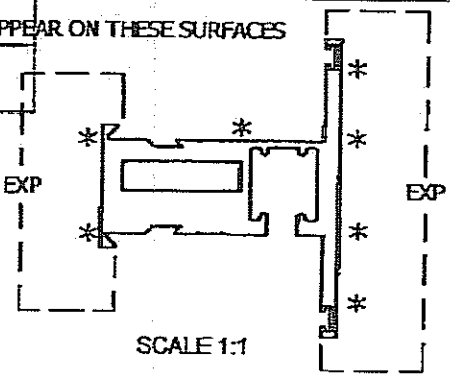

SCALE 1:1

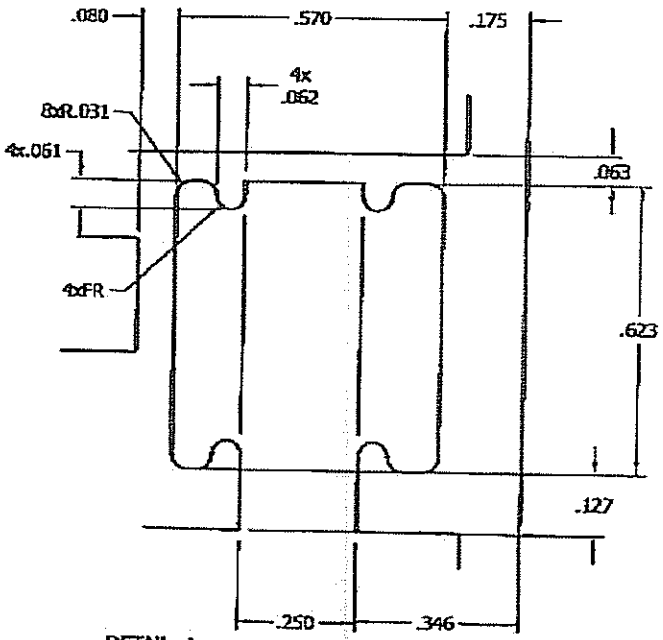

DETAIL A
SCALE 4:1

UNMARKED WALLS: NONE | UNMARKED CORNERS: R.010 | UNMARKED FILLETS: R.010

UNLESS OTHERWISE SPECIFIED, STANDARD ALUMINUM ASSOCIATION TOLERANCES APPLY • FRONTIER ID. MARK TWO .010 R x .100 APART

AREA 1.182	PRESS 4	DWN CD	Frontier Aluminum Corp.
WT/FT 1.418	PORTS 10x5-1H	DATE 12.28.2009	2480 Railroad St.Corona, Ca
PERI. 15.679	W/P HOLLOW	15097-1 ACX	Ph[951] 735-1770 Fax 735-1885
FACTOR 11	BKR. HOLLOW	CLASS HOLLOW	http://www.frontier-aluminum.com
C.G.D. 2.876	BOL.	13.182	ALLOY & TEMPER 6063-T6
AW-8331/95			DIE NO. 9893 REV. N/C

Dec-29-2009 07:31 ARCADIA,INC 3235890517

REPORT NO: A09C-117

DATE: 12/29/09

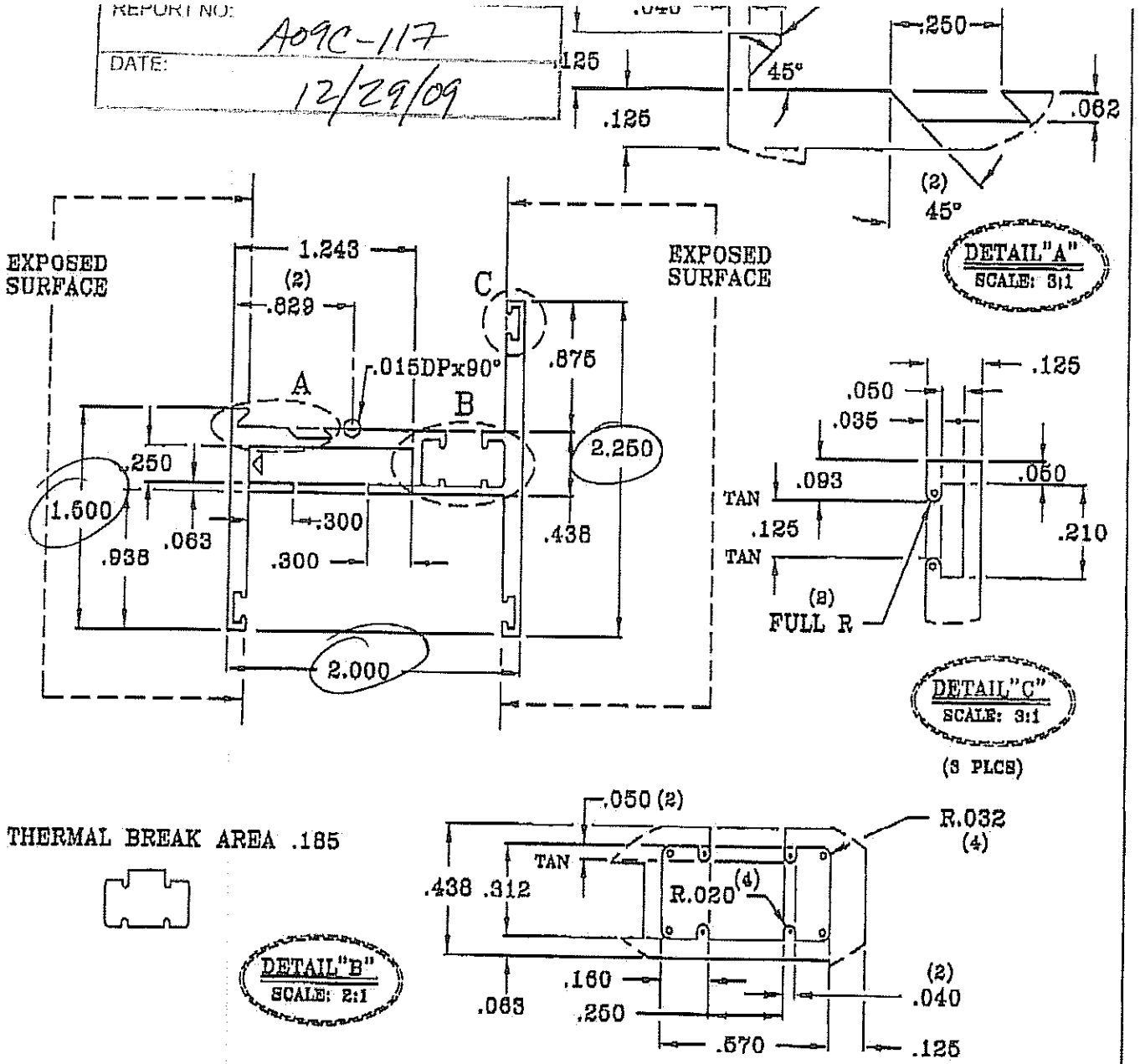

▷.010 R. X .010DEEP I.D. MARK

NOTE: .125 TYP. WALL EXCEPT AS NOTED
UNMARKED CORNERS .010 R.

CONTAINER	8	DIE RING	6	SPACER RING	2			
AREA	.671	PORTS	2	BKR	600157			
WT/FT	.805	W/P	POCKET	BOLSTER	2-8			
PERI.	15.327	ARC24552		DIE SIZE	10x2			
DEN.	TAS	6/26/00						

FITS WITH PART#

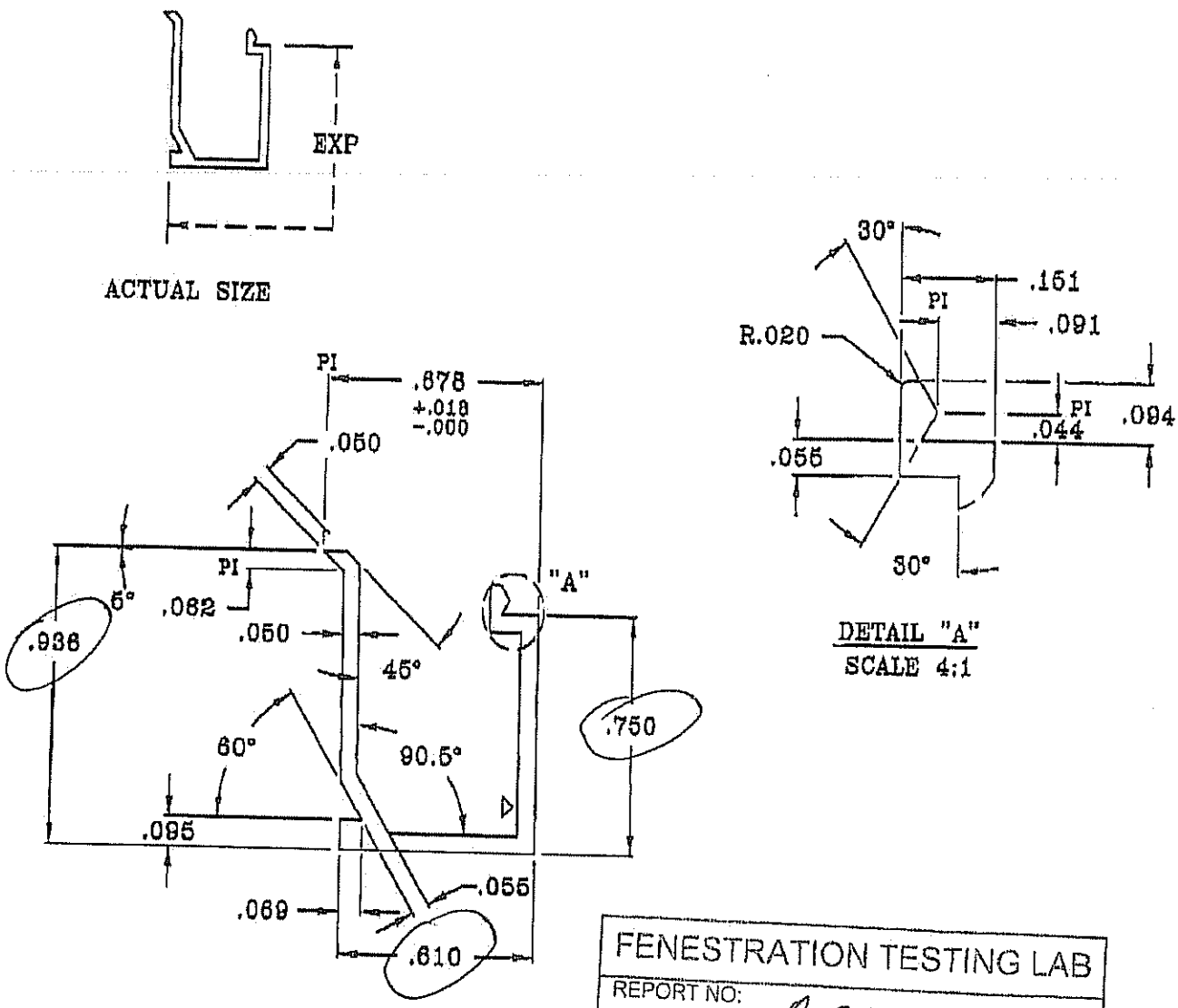

FENESTRATION TESTING LAB
REPORT NO: A09C-117
DATE: 12-29-09

▷.010 R. X .010DEEPI.D. MARK NOTE: .055 TYP. WALL EXCEPT AS NOTED
UNMARKED CORNERS .010 R.

CONTAINER 7/8	DIE RING 5	SPACER RING 2					
AREA .132	PORTS 8	BKR 912070					
WT/FT .158	W/P 912070	BOLSTER 8-2					
PERI. 4.936	ARC22223	DIE SIZE 9x1					
DWN. BY IAZ	DATE 7/13/99	MAT'L. 6063-T5					
CHKD. BY	DATE	STANDARD TOLERANCES UNLESS OTHERWISE NOTED	LET.	REVISION		BY	DATE

SIERRA ALUMINUM COMPANY
8345 Flootwood Drive
Riverside, California 92509
(909)781-7800 FAX (909)781-7864

CUSTOMER: ARCADIA, INC
PART NAME: GLAZING BEAD FOR 1" GLASS
SCALE: 2:1 — PART NO. WWB-03
DIE NO. 912070

Page 5 of 5

LEED-CS Arcadia, Inc. Aluminum Exterior Systems

Arcadia, Inc. products comply with the LEED for Core & Shell Rating System (LEED-CS). Let us help you build structures that are healthy, long-lasting, and efficient.

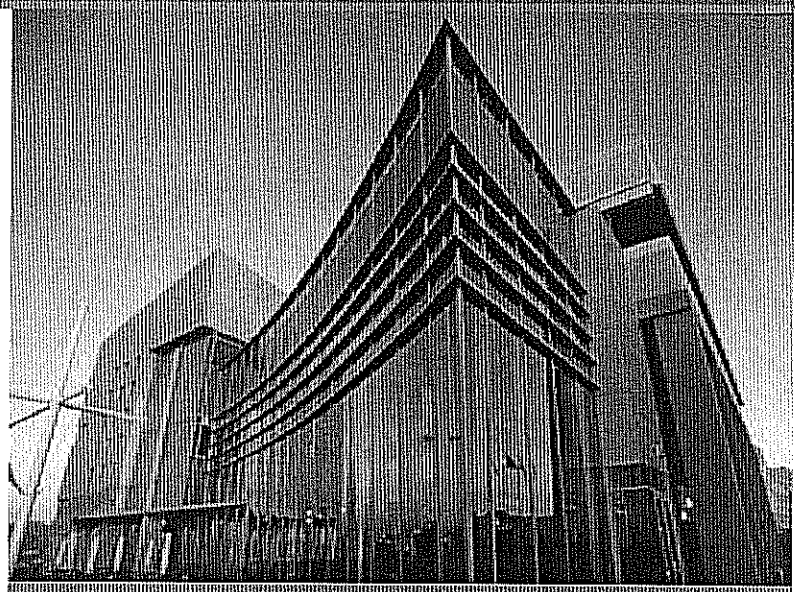

What is LEED?

Leadership in Energy and Environmental Design or LEED is the industry-recognized, voluntary standard that defines high performance green buildings and interiors--which are healthier, more environmentally responsible and more profitable structures.

LEED-CS certification signifies the design and construction of a building is environmentally sound. Interiors and other areas that the developer has no control over are not covered by LEED-CS.

The U.S. Green Building Council (USGBC) has developed rating systems for all aspects of the built environment.

How Can Arcadia, Inc. Help?

By choosing Arcadia, Inc. aluminum frames systems, you can be sure that the aluminum material we use is recycled and manufactured on site.

The weighted scrap content of our extrusions is 47.9-percent. This includes a post consumer scrap content of 11.1-percent and a post industrial scrap content of 36.8-percent. The remaining 52.1-percent of the extrusions is prime aluminum.

A formal, project specific letter will be provided at your request!

LEED-CS Materials & Resources Version 2.0

Arcadia, Inc. products can be used to obtain points for the following:

MR Credit 3: Materials Reuse 1% — 1 point
Use salvaged, refurbished, or reused materials such that the sum of these materials constitute at least 1%.

MR Credit 4.1: Recycled Content: 10% — 1 point
Use materials with recycled content such that the sum of post-consumer recycled content plus one-half of the pre-consumer content constitutes at least 10-percent of the total value of the materials in the project.

MR Credit 4.2: Recycled Content: 20% — 1 point
10-percent beyond MR Credit 4.1.

MR Credit 5.1: Regional Materials: 10% Extracted, Processed, & Manufacture Regionally — 1 point

MR Credit 5.2: Regional Materials: 20% Extracted, Processed & Manufactured Regionally — 1 point

LEED for Core and Shell Handbook Version 2.0 is the most updated compliance handbook.

arcadia

2301 E. Vernon Ave.
Vernon, CA 90058
323 908-5430

2187 Alpine Way
Hayward, CA 94545
510 783-4990

14955 N.E. 90th St.
Redmond, WA 98052
425 869-7300

94-410 Uke'e St.,
Bldg. A
Waipahu, HI 96797

1850 E. Maule St.
Las Vegas, NV 89119
702 798 7300

2510 W. Geneva Dr.
Tempe, AZ 85282
602 437-2510

2324 Dell Monte St.
Sacramento, CA 95691
916 375-1478

4705 Mcleod Rd. NE
Albuquerque, NM 87109
505 341-4222

60 Bonner St.
Stamford, CT 06902
800 423-6565

031108

SIERRA ALUMINUM COMPANY

ALUMINUM EXTRUSIONS • PAINTING • ANODIZING • FABRICATION

An Employee Owned Company

October, 2010

Re: Recycled Scrap Content Information

Dear Customer,

Sierra Aluminum Company is a supplier of aluminum extrusions. All of the extrusions provided by Sierra Aluminum are manufactured in either Riverside or Fontana, California. The raw material used in the production of aluminum extrusions is known as billet. Sierra Aluminum Company operates its own billet manufacturing operation in Riverside, California.
The billet mix available for production during the third quarter of 2010 contained 100% of billet manufactured by Sierra Aluminum. The billet manufactured by Sierra Aluminum had a post consumer scrap content of 15.0% and a post industrial scrap content of 29.4% for a total scrap content of 44.4%.

Please note, if you are using this letter to document scrap content for a LEED certified project, it should only be applied to the portion of the extrusions actually manufactured by Sierra Aluminum Company. Extrusions provided by another supplier will have significantly different post consumer and post industrial scrap contents and should be supported with documentation from that source. Using this letter to describe scrap contents for all extrusions on a project blended from multiple extrusion sources would not be an accurate representation of the true scrap content of your project.

If you have any questions or need further information, please contact me at (951) 823-8746 or via email at *tharris@sierraaluminum.com.*

Yours Sincerely,

Tony Harris
Purchasing Manager

2345 Fleetwood Drive • Riverside, CA 92509-2426
951-781-7800 • FAX 951-787-6577
www.SierraAluminum.com

NFRC

National Fenestration Rating Council®

CERTIFIED